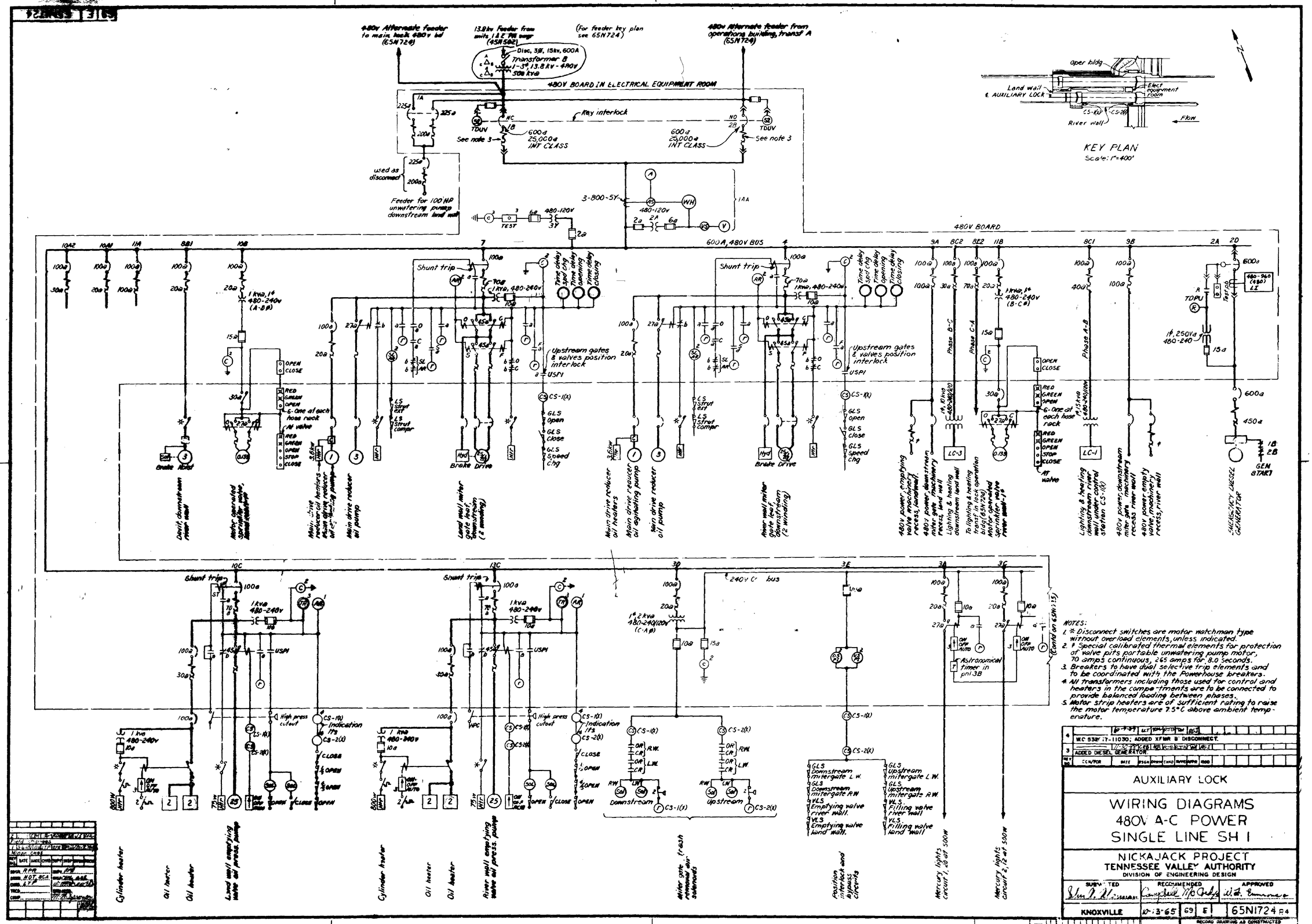
480V Alternate feeder to main lock 480v bd (65N724)
13.8kv Feeder from units 1 & 2 PA swgr (45N502)
(For feeder key plan see 65N724)
480V Alternate feeder from operations building, transf A (65N724)
Disc, 3Ø, 15kv, 600A
Transformer B
1-3Ø, 13.8kv - 480v
500 kva
480V BOARD IN ELECTRICAL EQUIPMENT ROOM
Key interlock
600a 25,000a INT CLASS
See note 3
used as disconnect
Feeder for 100 HP unwatering pump downstream land wall
3-800-5Y
480-120v
TEST
480V BOARD
600A, 480V BUS
Shunt trip
Time delay spd chg
Time delay opening
Time delay closing
Upstream gates & valves position interlock
USPI
Phase B-C
Phase C-A
Phase A-B
Brake Hoist
Brake Drive
Davit downstream river wall
Main drive reducer oil heaters
Main drive reducer oil agitating pump
Main drive reducer oil pump
Land wall miter gate leaf, downstream (2 winding)
River wall miter gate leaf, downstream (2 winding)
Lighting & heating downstream land wall
Lighting & heating downstream river wall
480V power, downstream miter gate machinery recess, river wall
480V power empty valve, machinery recess, river wall
EMERGENCY DIESEL GENERATOR
GEN START
240V C bus
Astronomical timer in pnl 3B
Cylinder heater
Oil heater
Oil heater
Land wall emptying valve oil press. pump
Cylinder heater
Oil heater
Oil heater
River wall emptying valve oil press. pump
Miter gate trash removal air solenoids
Position interlock and bypass circuits
Mercury lights circuit 1, 20 at 500W
Mercury lights circuit 2, 12 at 500W
KEY PLAN
Scale: 1"=400'
Oper bldg
Land wall
AUXILIARY LOCK
Elect equipment room
River wall
Flow
NOTES:
1. * Disconnect switches are motor watchman type without overload elements, unless indicated.
2. † Special calibrated thermal elements for protection of valve pits portable unwatering pump motor, 70 amps continuous, 265 amps for 8.0 seconds.
3. Breakers to have dual selective trip elements and to be coordinated with the Powerhouse breakers.
4. All transformers including those used for control and heaters in the compartments are to be connected to provide balanced loading between phases.
5. Motor strip heaters are of sufficient rating to raise the motor temperature 7.5°C above ambient temperature.
4 W.C 53217-11030; ADDED XFMR B DISCONNECT.
3 ADDED DIESEL GENERATOR.
AUXILIARY LOCK
WIRING DIAGRAMS
480V A-C POWER
SINGLE LINE SH 1
NICKAJACK PROJECT
TENNESSEE VALLEY AUTHORITY
DIVISION OF ENGINEERING DESIGN
SUBMITTED
RECOMMENDED
APPROVED
KNOXVILLE
10-13-65
69
E
65N1724 R4
RECORD DRAWING AS CONSTRUCTED