GENERATOR NUMBER 4 DATE 4 FEB 04

AIR GAP GENERATOR ROTOR					
POLE	GAP	POLE	GAP	POLE	GAP
1	488	24	511	47	429
2	497	25	520	48	443
3	464	26	493	49	435
LS 4	509	27	455	50	436
5	495	28	506	51	430
6	514	29	497	52	455
7	509	30	485	53	440
8	525	31	450	54	461
9	545	32	464	55DS	460
10	540	33	441	56	477
11	550	34	438	57	473
12	550	35	422	58	470
13	569	36	421	59	456
14	585	37	418	60	462
15	580	*38RS	387	61	430
16	585	39	415	62	460
17	561	40	415	63	480
* 18	594	41	424	64	490
19	572	42	408	65	501
20	580	43	395	66	476
US 21	550	44	412	67	500
22	527	45	414	68	493
23	538	46	416		

AIR GAP MAIN EXCITER			
MAIN POLE	GAP	COMM. POLE	GAP
1		1	
2		2	
3		3	
4		4	
5		5	
6		6	
7		7	
8		8	
9		9	
10		10	

AIR GAP PILOT EXCITER			
MAIN POLE	GAP	COMM. POLE	GAP
1		1	
2		2	
3		3	
4		4	
5		5	
6		6	

REMARKS:

MEGGER READINGS

1. P.M.G. TO GROUND
2. UPPER BEARING
3. OIL LINE COUPLINGS

BEFORE PLUMB

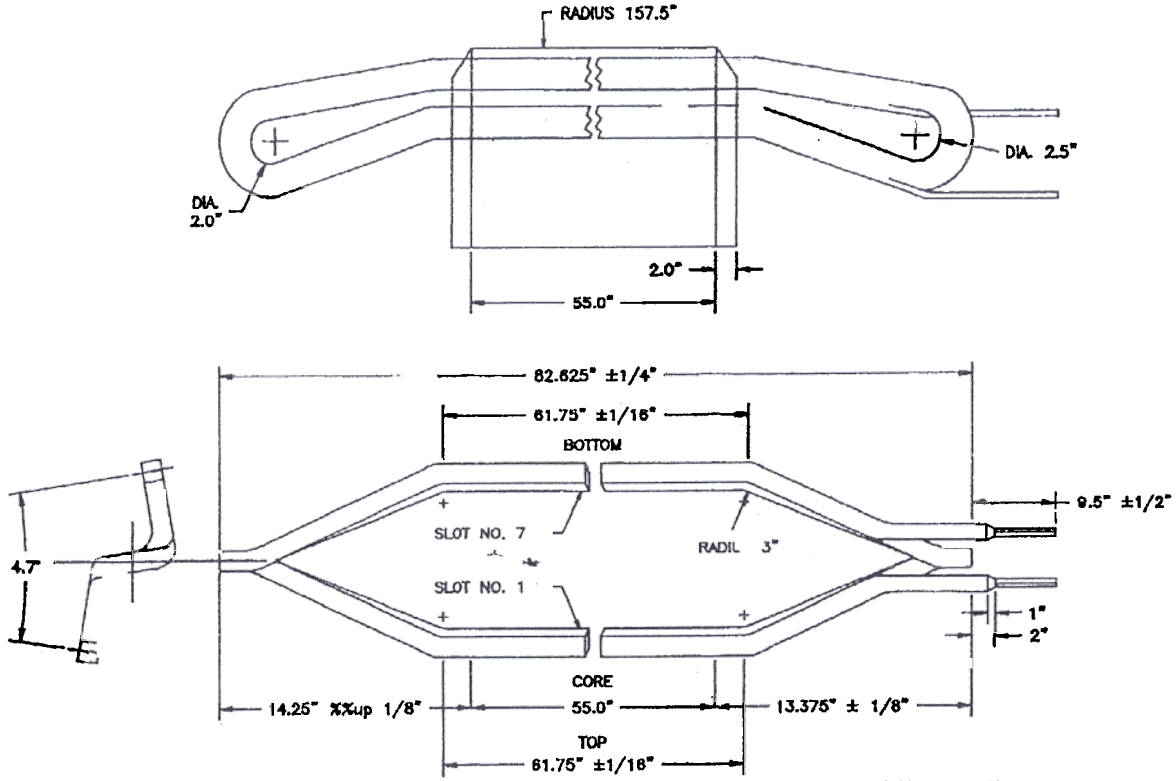

NUMBER OF SLOTS = 456
PUNCHED SLOT = 0.900" X 6.250" – 0.375"
MEAN LENGTH OF TURN = APP 172"
NUMBER OF TURNS = 3
WIRES PER TURN = 2 X 8
BARE STRAND SIZE = 0.092" X 0.255"
WEIGHT OF COPPER PER COIL = APP. 62 LBS
TRANSPOSITION AFTER ONE HALF TURN
SKEW = NONE

COIL SECTION DIMENSIONS

WIDTH	0.840"	+ 0.010" – 0.015"
DEPTH	2.790"	+ 0.010" – 0.015"

PLACER CE BORD EN PREMIER DANS LA MACHINE

À télécopier
À: RENDELL
Service:
No du télécopieur: 502-343-0149
Nbre de pages:
De: MICHEL
Date: 97-01-24
Compagnie:
No du télécopieur:
Message:
Feuillets -Notocollant- de télécopie 7903F

Générale Électrique du Canada Inc.
General Electric Canada Inc.
BELDEL, CANADA
© Copyright 1996

TITRE TITLE: STATOR COIL
CONTRAT CONTRACT: –
NOMEN P.BILL: –
PROJECTION
NO. DESSIN DRAWING: BEL383-002
FEUILLE SHEET: 1
DE OF: 1
REV: 0

PROJET/PROJECT: U CORPS WOLF CREEK UNIT –
REQUISITION NUMBER: –
DES/DR. M. BEAUPRÉ
VER/CHK. P. LEBEL
APPR. –
DATE: 96-12-13
DIM. IMPERIAL

REVISIONS
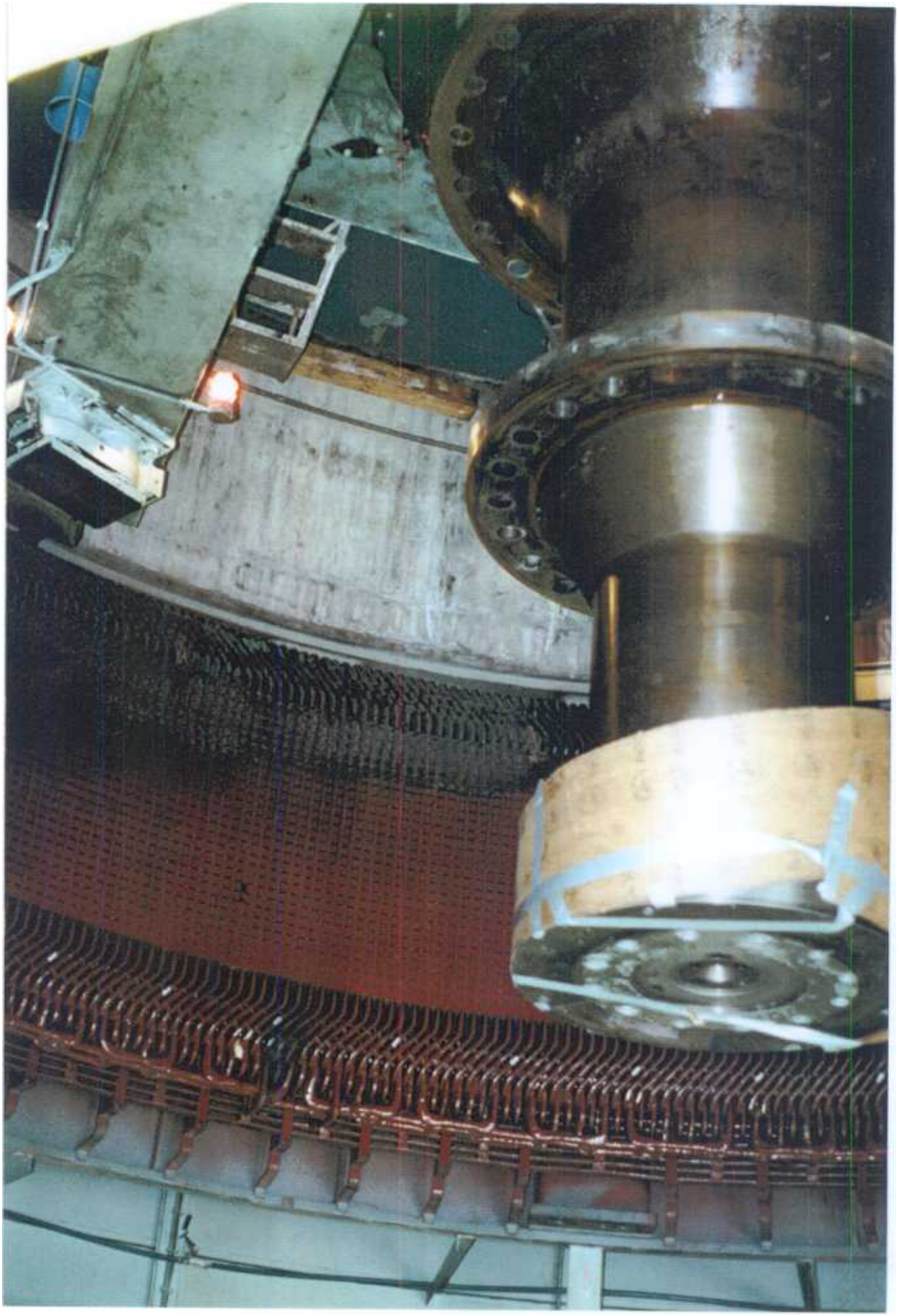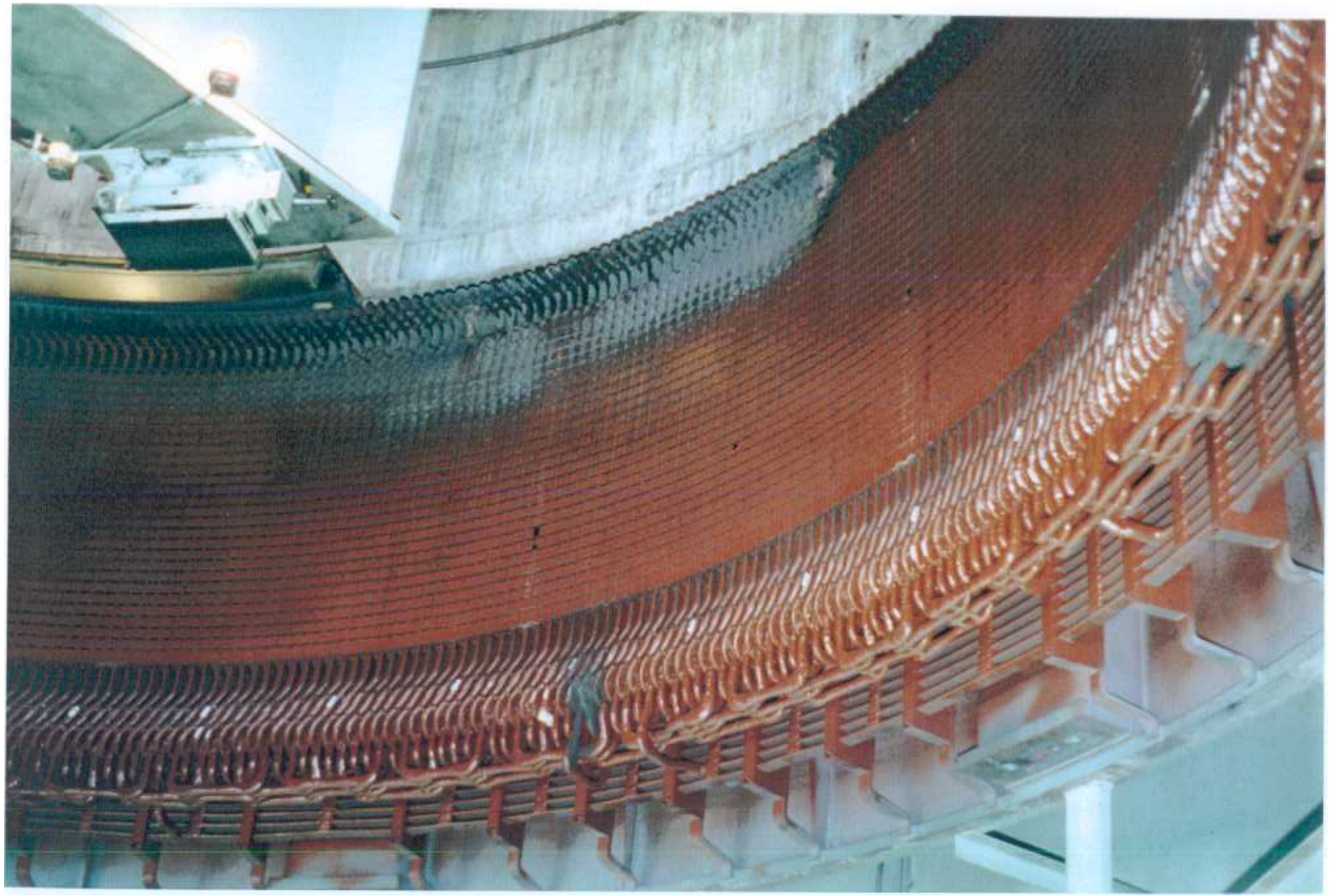
A3 (04/96)