US Army Corps of Engineers®
Nashville District

IFB No. W912P5-04-B-0011

POWERHOUSE BRIDGE CRANE REHABILITATION

Wolf Creek Dam
Cumberland River
Russell County, Kentucky

Center Hill Dam
Caney Fork River
Dekalb County, Tennessee

Construction Specifications

Nashville, Tennessee

April 2004

POWERHOUSE BRIDGE CRANE REHABILITATION
WOLF CREEK DAM AND CENTER HILL DAM

TECHNICAL SPECIFICATIONS
TABLE OF CONTENTS

SECTION	TITLE
DIVISION 1	**GENERAL REQUIREMENTS**
01010	CONTRACTOR'S OPERATIONS
01090	SOURCE OF REFERENCED PUBLICATIONS
01270	MEASUREMENT AND PAYMENT
01330	SUBMITTAL PROCEDURE
01350	ENVIRONMENTAL PROTECTION
01451	CONTRACTOR QUALITY CONTROL
01525	SAFETY AND OCCUPATIONAL HEALTH REQUIREMENTS
01600	BRIDGE CRANE REHABILITATION
01785	AS-BUILT DRAWINGS
DIVISION 2	**SITE WORK**
02080	ASBESTOS ABATEMENT WORK
02081	HAZARDOUS MATERIALS
02120	TRANSPORTATION AND DISPOSAL OF HAZARDOUS MATERIALS
DIVISION 5	**METALS**
05101	METALWORK FABRICATION, MACHINE WORK, AND MISC. PROVISIONS
05502WC	METALS: MISCELLANEOUS, STANDARD ARTICLES, SHOP FABRICATED ITEMS-WOLF CREEK
05502CH	METALS: MISCELLANEOUS, STANDARD ARTICLES, SHOP FABRICATED ITEMS- CENTER HILL
DIVISION 9	**FINISHES**
09900	PAINTING
DIVISION 15	**MECHANICAL**
15000WC	MECHANICAL-WOLF CREEK
15000CH	MECHANICAL-CENTER HILL
DIVISION 16	**ELECTRICAL**
16050WC	ELECTRICAL WORK AND EQUIPMENT-WOLF CREEK
16050CH	ELECTRICAL WORK AND EQUIPMENT-CENTER HILL

SECTION 01010

CONTRACTOR'S OPERATIONS

TABLE OF CONTENTS

PART 1 GENERAL

1.1 GENERAL INFORMATION
1.2 REFERENCES
1.3 SUBMITTALS
1.4 NOT USED
1.5 SUPERVISOR(S)
1.6 CONTRACTOR'S GENERAL PERSONNEL
1.7 WORK AREAS AND ACCESS
1.8 VEHICLES
1.9 PROJECT SECURITY AND WORKING HOURS
1.10 NOT USED
1.11 SAFE CLEARANCE PROCEDURES
1.12 DRAWINGS AND MANUALS
1.13 EXISTING SANITATION FACILITIES
1.14 UTILITIES
1.15 CONTRACTOR'S EQUIPMENT AND MATERIAL
1.16 CONTRACTOR'S CRANES
1.17 GOVERNMENT FURNISHED TOOLS AND MISCELLANEOUS SITE EQUIPMENT
1.18 STORAGE OF EQUIPMENT AND MATERIALS
1.19 NOT USED
1.20 NOT USED
1.21 DAMAGED EQUIPMENT OR ABNORMAL CONDITIONS
1.22 PROTECTION OF MATERIAL AND WORK
1.23 DISPOSAL OF ELECTRICAL AND MECHANICAL EQUIPMENT AND MISC. MATERIALS
1.24 PROTECTION AND RESTORATION OF EXISTING FACILITIES
1.25 DUST CONTROL IN POWERHOUSE
1.26 NOISE CONTROL
1.27 FIRE CONTROL
1.28 CARE OF DRAINS
1.29 DAILY CLEAN-UP AND DISPOSAL
1.30 BARRICADES AND DANGER, DETOUR AND WARNING SIGNS
1.31 WORK BY THE GOVERNMENT CONCURRENT WITH CONTRACTOR WORK
1.32 COOPERATION WITH OTHERS
1.33 SCAFFOLDING
1.34 PROJECT REPORTING
1.35 WEEKLY MEETINGS
1.36 NOT USED
1.37 PERMITS AND RESPONSIBILITIES
1.38 QUALITY CONTROL AT THE JOB SITE/POWERHOUSE

PART 2 PRODUCTS AND PART 3 EXECUTION

NOT USED

SECTION 01010

CONTRACTOR'S SITE OPERATIONS

PART 1 GENERAL

1.1 GENERAL INFORMATION

This section covers the general requirements applicable to specific Contractor's operations or equipment for work performed on site.

1.2 REFERENCES

The publications listed below form a part of this specification to the extent referenced. The publications are referenced to in the text by basic definition only.

AMERICAN SOCIETY OF MECHANICAL ENGINEERS (ASME)

ASME B30.2 (2001) Overhead and Gantry Cranes (Top Running Bridge, Single or Multiple Girder Top Running Trolley Hoist)

CODE OF FEDERAL REGULATIONS (CFR)

29 CFR 1926 (1992) Safety and Health Regulations for Construction

FEDERAL HIGHWAY ADMINISTRATION (FHWA)

FHWA 6 (1988) Manual on Uniform Traffic Control Devices for Streets and Highways

US ARMY CORPS OF ENGINEERS (USACE)

EM 385-1-1 (2003) Safety and Health Requirements Manual

1.3 SUBMITTALS

Submittals required by this section of the Technical Specifications shall be for Government approval (GA) or for information only (FIO), and shall be submitted as stated below in accordance with SECTION 01330. The time of submittal shall be in accordance with SECTION 01330, unless otherwise indicated below.

SD-01 Data

Supervisors Qualifications; FIO

Qualifications and identification of Contractor's work supervisor(s), a minimum of 30 calendar days prior to the start of site work, para. 1.5.

Organizational Chart; FIO

Organization chart, a minimum of 30 calendar days prior to the start of site work, para. 1.6.1.

Employee Identification Procedure; FIO

Procedure for identification and control of employees entering or leaving site, a minimum of 30 days prior to the start of site work, para. 1.6.2.

List of Employees; FIO

List of personnel working on the site, a minimum of 14 calendar days prior to the start of site work and updated weekly thereafter to reflect a current listing, para. 1.6.2.

Roadway Access Agreement; FIO

Roadway access agreement, a minimum of 14 calendar days from the date of signature, or before the use of the roadways begins, whichever is earliest, para. 1.7.2.

Working Hours; GA

Working hours, shifts and days of the week to be worked other than those of the Project, a minimum of 7 calendar days in advance, para. 1.9.2.

Site Work Schedule; GA

Site work schedule featuring the major stages of the work, a minimum of 30 calendar days prior to the start of site work, para. 1.9.3

Control of Hazardous Energy; GA

Clearance to take operating equipment out of service, a minimum of 14 calendar days prior to the outage date, para. 1.11.

Temporary Electrical Powerlines; GA

Proposed site powerlines and temporary electrical connections, a minimum of 30 calendar days prior to installation, para. 1.14.2.

Transportation of Heavy Equipment; GA

A plan and method of transportation and operation of cranes and heavy equipment, a minimum of 30 calendar days prior to their transportation and site operation, para. 1.16.3.

Indoor Storage Locations; GA

Indoor storage locations for equipment and material, minimum of 30 calendar days, prior to area usage, para. 1.18.

Dust and Fume Control; GA

Dust and fume control program, a minimum of 30 calendar days prior to performing on-site work, para. 1.25.

Off-site Disposal Area; GA

Location of off-site disposal area and plan for disposal, a minimum of 30 calendar days prior to the commencement of site work, para. 1.29.

Access Equipment; GA

Any scaffolding, ladder, stairway, or other access schemes proposed, a minimum of 30 calendar days prior to their installation and use, para. 1.33.

Project Status; FIO

Project report giving project status and activities, once a week of on-site work, para. 1.34.

SD-08 Statements

Record of Parts Removed from Site; FIO

Record of parts shipped from the project for repair, available for review at all times, para. 1.38.2.

Schedule Change Request; GA

Request to change schedule of regular work hours, etc., minimum 48 hours prior to change, para. 1.9.3.

Request for Drawings and Data; FIO

Request for copies of data and drawings, a minimum of 7 days in advance, para. 1.12.

Notification of Damaged Equipment; FIO

Notice of finding damaged equipment or other abnormal conditions of equipment or parts, immediately after discovery, para. 1.21.

1.4 NOT USED

1.5 SUPERVISOR(S)

At least one (1) full-time employee of the Contractor shall be available at the worksite anytime other Contractor or subcontractor personnel are working on the site to supervise and direct the work specified herein. Supervisor(s) shall be present at the site during erection and shall be responsible for providing complete and correct direction of all rehabilitation work, the initial starting, and all subsequent operation of the equipment until the field tests are completed. The supervisor(s) shall be responsible for following the Government's Safe Clearance Procedure, para. 1.11. The supervisor(s) shall initiate instructions for all actions necessary for the proper inspection, handling, assembly and testing of the equipment. The supervisor(s) shall keep a record of all measurements taken during rehabilitation and shall provide copies on request or on completion of installation of the equipment associated with the crane. The supervisor(s) shall keep all as-built drawings to current standards and provide copies upon completion of the work. The supervisor(s) shall be fluent in the spoken and written English language. The supervisor(s) shall have been engaged in similar crane work, as is specified herein, as a supervisor for a minimum of 3 years. Documentation of their experience shall be submitted.

1.6 CONTRACTOR'S GENERAL PERSONNEL.

1.6.1 General

The Contractor shall submit a project organization chart reflecting at least those positions described herein and defining their work relationships, etc. All personnel employed by the Contractor shall be fully qualified in their respective fields to render the services necessary.

1.6.2 Identification of Contractor's Employees

The Contractor shall be responsible for furnishing employee identification and for requiring each employee at the powerhouse to display such identification as may be approved and directed by the Contracting Officer, unless otherwise specified below. All Contractor personnel, prior to engaging in work on project premises, shall be issued an identification card by the Contractor. The I.D. cards shall include the following information:

Name of Contractor
Name of Employee
Birth date
Height
Weight
Hair color
Eye color
Recent photo

All prescribed identifications shall be returned immediately to the Contractor upon release of any employee. The Contractor shall supply a complete listing of all personnel and their titles who will be working on the project. This listing shall be revised at a minimum of once weekly and revisions provided. When required, by the Contracting Officer, the Contractor shall obtain and submit fingerprints of all persons employed by it or to be employed at the powerhouse.

1.6.3 Non English Speaking Personnel

Pursuant to the requirements of EM 385-1-1, Para. 01.A.04 and 01.A.05, the Contractor will provide a bilingual foreman that is fluent in the language of the workers, for each work group that has employees that do not speak English. The Contractor will implement the requirements of EM 385-1-1, Para. 01.B.01, and 01.B.03 through these foremen.

1.7 WORK AREAS AND ACCESS

1.7.1 Access Roads

No new access roads are required for this work. Any damage to existing roadways that are used for access purposes shall be repaired and the surface shall be restored to its "as found" condition.

1.7.2 Road Restrictions

The Contractor shall comply with any special requirements of the State, County, Local authorities and Corps of Engineers for use of existing roadways. These special requirements include, but are not limited to, traffic regulations and load limits. The Contractor is responsible for investigating and understanding these restrictions. No time extensions or cost claims will be allowed due to road restrictions. Any agreements negotiated with the State or County for road use will be furnished to

the Government before use of roadways begin. Both lanes of roads shall not be blocked by the Contractor. If one lane is blocked the Contractor shall provide the necessary flaggers, based on the visibility, to control traffic.

1.7.3 Access by Government Personnel

Clear access shall be maintained for Government personnel and equipment through all work areas.

1.7.4 Contractor's Staging Area and Employee Access

The Contractor's staging area shall be restricted to the area designated by the Government. His job-site office may be in the staging area, as approved. The project areas off-limits to Contractor shall be all areas other then the work areas. Salespersons or personnel seeking employment will not be permitted inside the powerhouse. Signs may be erected outside the powerhouse containing instructions for personnel seeking the Contractor. The content and location of the signs must be approved. The Contractor shall provide his own office space and administrative facilities and all temporary storage buildings. All temporary Contractor site facilities shall be disposed of before final acceptance of all work.

1.7.5 Access to Work Areas

1.7.5.1 Powerhouse

Access to the powerhouse shall be obtained from the powerhouse control room operator. For Wolf Creek the operator can be accessed by dialing "0" or 7011 from the outside phones. For Center Hill the operator can be accessed by dialing 100 or 3031 from the outside phones. The employees shall identify themselves by giving their names to the operator before entering the building. When the employees leave the powerhouse for the day they shall notify the operator of their departure. At no time will any doors be blocked open upon entering or leaving the building. The powerhouse elevator shall not be used to transport equipment and material.

1.8 VEHICLES

1.8.1 Use of Private Vehicles

Private vehicles of the Contractor and Contractor's employees shall enter and leave the Wolf Creek project on the access road from US Highway No. 127, and the Center Hill project on the access road from State Highway 96. Parking of private vehicles shall be restricted to the areas designated. Spaces for approximately 5 privately owned vehicles will be available in a designated area near the powerhouse. Additional parking will be designated upon request, but may be located up to 1 mile from the powerhouse. Contractor shall maintain his designated parking areas.

1.8.2 Identification of Vehicles

All Contractor's vehicles shall display approved permanent identification of such size and color to allow Government personnel to identify the vehicle.

1.9 PROJECT SECURITY AND WORKING HOURS

1.9.1 General

A procedure shall be prepared and submitted for approval for the identification and control of employees entering or leaving the project during the hours of closure. The security of the Contractor's property and items furnished under this contract are the Contractors responsibility, until accepted, whether stored inside or outside the powerhouse.

1.9.2 Working Hours

Arrangement and scheduling of working hours and crews shall be coordinated with the Government. The normal working hours of the project staff are 6:15 a.m.-4:45 p.m., CST, Monday through Thursday with Federal holidays off. Working hours which extend past 4:30 p.m. weekdays, on Fridays, on weekends, and Federal holidays, or which are proposed to be different from the project working hours shall be coordinated and approved by the Contracting Officer at least 14 days in advance.

1.9.3 Site Work Schedule

A site work schedule shall be prepared and submitted. The schedule shall include major and minor work elements and stages of the work. These documents shall be updated and submitted to reflect the actual work elements and progress and that anticipated in the future.

1.10 NOT USED

1.11 SAFE CLEARANCE PROCEDURES

A Hazardous Energy Control (HEC) procedures are implemented for all the maintenance and construction activities on Corps property. These procedures are in accordance with OSHA regulation 29 CFR 1910.147, 1910.333, 1910.269 and USACE ER 385-1-31, The Control of Hazardous Energy (safe clearance). Any work performed at the Wolf Creek project will be performed under safe clearance. The Contractor shall request clearance on a piece of equipment or system before any work may begin. The Corps will establish the limits of the clearance, tag and lock the equipment or systems. The Contractor will be required to institute their own safe clearance procedures in accordance with OSHA and USACE regulations, within the perimeter or the Corps clearance. The Contractor’s clearance shall not inhibit or interfere with the Corps operation of the plant. The clearances shall not be violated. Any violation of Hazardous Energy Control procedure (Safe Clearance Procedures) will be grounds for removal of the offender(s).

1.12 DRAWINGS AND MANUALS

Existing drawings and manuals that may be of value for the work will be available for viewing at the powerplant during normal project day shift working hours. Drawings and manuals shall not be removed from the office. However, one (1) copy of available technical data and drawings not included in the reference drawings will be made at no cost to the Contractor within 7 normal working days after the request for such copies has been made. The drawings and manuals are furnished for information only and the Government does not guarantee the drawings or

manuals will match actual field conditions. Reference drawing deviations shall not be the basis for a contract claim.

1.13 EXISTING SANITATION FACILITIES

Restroom facilities are available to the Contractor personnel at Elevation 611 only, near the reception room.

1.14 UTILITIES

1.14.1 Government Furnished Utilities

All utilities that are required for use in performance of the work under this contract shall be Contractor-furnished except as noted below:

a. Water. All reasonable amounts of non-potable water will be made available from existing outlets. The Contractor will be responsible for freeze proofing all accessed water sources.

b. Electricity. Electric power may be obtained from existing sources located at various locations near the work areas unless otherwise approved:

(1) 120-volt, 1-phase, 20-amperes (maximum) circuits

(2) 480-volt, 3-phase, 50-amperes (maximum) circuits. The 480 volt service is a delta system.

(3) The Contractor may provide his own temporary electrical power distribution panel and connect a power cable from a 480-volt outlet to this temporary panel.

c. Compressed Air. Up to 100 scfm of compressed air (nominal pressure of 100 psig) will be provided from existing outlets located throughout the powerhouse.

1.14.2 Temporary Utility Connections

All utilities provided by the Government shall be at no cost. Care shall be exercised in conserving all utilities. The contractor shall provide all necessary hoses, cords, couplings, plugs, GFI’s and other appurtenances as required to connect to the system(s). All temporary connections shall be subject to approval. All electric power required outside the powerhouse shall be Contractor-furnished. The location of all power lines and all temporary connections for electricity shall be subject to approval. All temporary circuits and devices shall be provided, connected, and maintained and removed prior to final acceptance. Ground fault protection shall be provided for all circuits used, inside and outside, and shall be Contractor-furnished. The temporary panel shall conform to current NEC standards in EM 385-1-1.

1.14.3 Telephone

The project telephone system is not available to the Contractor.

1.15 CONTRACTOR'S EQUIPMENT AND MATERIAL

1.15.1 General.

The planned method of transportation and operation of cranes and other heavy equipment to be used in the performance of this contract shall be

submitted. This shall include the type, size, and loadings of equipment and the proposed transportation routes and work areas to be used on the project. Operation of heavy equipment adjacent to existing structures shall be avoided when possible.

1.15.2 Movement of Equipment and Material by the Contractor

The Contractor shall provide all cranes, rigging, lifts, operators, and other necessary means to move equipment or material as required to pursue and complete the work whether owned by the Government or by the Contractor, unless otherwise specifically mentioned. This includes but is not limited to the unloading and loading of equipment and material.

1.15.3 Area Lighting

The Contractor shall provide all lighting necessary to perform his work and to provide a safe work environment.

1.16 CONTRACTOR'S CRANES

1.16.1 General

Contractor's cranes and equipment furnished for this work shall conform with all applicable OSHA requirements and EM 385-1-1.

1.16.2 Crane Testing

Contractor's cranes shall be tested in accordance with EM 385-1-1 at the project prior to use on the project and shall be witnessed by the Government. Forty-eight hours (excluding weekends and federal holidays) notice of the test shall be given.

1.16.3 Loading Diagram

A crawler, wheel, and outrigger loading diagram and deck/powerhouse floor protection for outriggers shall be submitted prior to using any cranes over 50 tons capacity.

1.17 GOVERNMENT FURNISHED TOOLS, EQUIPMENT AND MISCELLANEOUS SITE EQUIPMENT.

Government tools and equipment at the project, i.e., lathes, drill presses, hand tools, etc., are not available for use.

1.18 STORAGE OF EQUIPMENT AND MATERIALS

Indoor and outdoor storage of equipment and materials will be permitted only at designated storage areas in the immediate vicinity of the powerplant which will be coordinated with the Government during the pre-work conference. A minimum access space of three feet shall be maintained between stored items and the existing powerhouse equipment.

1.19 NOT USED

1.20 NOT USED

1.21 DAMAGED EQUIPMENT OR ABNORMAL CONDITIONS

The Government shall be informed immediately upon finding any damaged equipment or other abnormal conditions involving additional work in

which the Contractor believes he has no responsibility. The failure or abnormality shall not be disturbed until witnessed by the GQAR. Prior to proceeding further with work on the bridge crane, the Contractor and the Government shall agree in writing as to the responsibility for the damage or abnormality.

1.22 PROTECTION OF MATERIAL AND WORK

All materials, supplies, tools, equipment and Government property (including all tools, equipment, and special devices supplied by the Contractor and to be turned over to the Government at the end of the Contract) shall at all times be protected and preserved in an approved manner and in accordance with the manufacturer's recommendations. If material, equipment, supplies, and work performed are not adequately protected, such property may be protected by the Government and the cost thereof will be charged to the Contractor or deducted from any payment due.

1.23 DISPOSAL OF ELECTRICAL AND MECHANICAL EQUIPMENT AND MISC. MATERIALS

Title to all materials and equipment to be disposed of, excepting salvage items and hazardous waste, is vested in the Contractor upon receipt of signed contract and such materials and equipment are designated scrap only as directed. The Government will not be responsible for the condition, loss or damage to such property after notice to proceed. The Contractor may retain these items in usable form and take possession of them providing that there is no subsequent cost or inconvenience to the Government. The Government does not guarantee that these items are complete or in working order, and the Contractor shall assume responsibility for any damages caused by their use immediately upon taking possession of them. Scrap materials shall be removed from the Government's property within 14 days of removal from the crane. Scrap shall not be sold on the site. Disposal of hazardous wastes shall be in accordance with SECTION 02120.

1.24 PROTECTION AND RESTORATION OF EXISTING FACILITIES

1.24.1 General

All existing grounds, property and facilities shall be protected whether or not shown on the drawings. Upon completion of the work, all the existing grounds, property and facilities, not included as a portion of the work, shall be left in a condition equal to the original condition prior to the contract. Costs for repair and restoration of any facilities shall be considered to be incidental to and included in the contract price.

1.24.2 Floor Protection

Protection of the powerhouse floors shall be provided and maintained. As a minimum, floor work areas shall be covered with visqueen (minimum thickness of 5 mil)., or equal and 5/8 inch-thick plywood or as otherwise approved. All floor trenches shall remain accessible. Any designations covered relating to fire protection equipment shall be remarked on covering. Any floors damaged or stained shall be repaired or replaced.

1.25 DUST CONTROL IN POWERHOUSE

All necessary measures shall be taken to effect maximum control of all dust and welding fumes created by operations under this contract. To the maximum extent possible, all dust and dirt shall be removed by vacuum cleaning. A proposed dust-control program shall be approved, in writing. Part of the required dust-control program shall include the following:

a. Provision of exhaust ducts which shall discharge outside the powerhouse structure where mechanical ventilation is used.

b. Furnishing and removing of oiled sawdust or other approved dust preventatives in areas which cannot be properly rendered free from excessive dusting by vacuum cleaning or other methods.

c. Vacuum cleaning (or other acceptable method) of spaces within the powerhouse where dust accumulates.

d. Gasoline or diesel-engine equipment operating inside the powerhouse shall have their exhausts ported to the outside.

The Contractor shall be responsible for the removal of all stains and residues, and the repair of damage to structures and equipment. Operating components of existing powerhouse equipment shall be protected by approved methods. Depending upon the Contractor's plant and equipment and methods of operation, additional provisions for satisfactory dust control will be required and shall be included in the proposed dust-control program. Decisions of the Government as to the adequacy and extent of the dust-control program and prosecution of the work shall be final. Powerhouse doors must be kept shut when not in use. The dust control in the powerhouse shall be considered as incidental to the work and no separate payment will be made therefore.

1.26 NOISE CONTROL

Noise control and noise levels shall conform to requirements set forth in the appropriate OSHA regulation and EM 385-1-1.

1.27 FIRE CONTROL

All fire fighting equipment, supplies, and personnel shall be supplied in accordance with EM-385-1-1. Delays due to fire will not be acceptable as the basis of a claim for additional compensation.

1.28 CARE OF DRAINS

Existing powerhouse floor drains including the unwatering drains and transformer cell drains shall not be used for disposal of any solid material and or any liquids other than clear water. Drains obstructed by the Contractor shall be cleaned by the Contractor. All costs incurred in the cleaning and clearing of plugged drains, shall be borne by the Contractor.

1.29 DAILY CLEANUP AND DISPOSAL

In conjunction with SECTIONS 01350, 02120, and 02081 all debris resulting from the work, such as waste metalwork, packing cases, scrap lumber, oil and grease, and other debris shall be collected, removed, and disposed of off site at least once per shift. Disposal shall be in

accordance with Federal, State and Local regulations. The location of the Contractor's off-site disposal area and a plan for safe disposal of material shall be approved. The Government's trash cans, dumpsters, etc. shall not be used. Liquid waste shall not be disposed of in powerhouse drains. All costs of removing debris shall be incidental to the work, and no separate payment will be made therefore. All temporary structures used by the Contractor in the course of the work shall leave the area looking "broom clean".

1.30 BARRICADES AND DANGER, DETOUR AND WARNING SIGNS

1.30.1 Barricades and Danger and Detour Signs

The Contractor shall provide, erect and maintain all necessary barricades, suitable and sufficient red lights, danger signals, and detour and other signs; provide a sufficient number of watchmen; and take all necessary precautions for the protection of the work and the safety of the public. Roads, etc. closed to traffic shall be protected by effective barricades, and obstruction shall be continuously illuminated day and night. Suitable warning signs shall be illuminated by lanterns or flares day and night.

1.30.2 Warning Signs

Warning signs shall be erected 500 feet in advance of any place on the project where operations interfere with the use of a road by traffic. Warning signs shall conform to the standards established in Part IV of the "Manual on Uniform Traffic Control Devices for Streets and Highways," published by the Federal Highway Administration.

1.31 WORK BY THE GOVERNMENT CONCURRENT WITH CONTRACTOR WORK

The Government will limit interference with the Contractor's work to the maximum reasonable extent and the Government and Contractor shall coordinate as necessary.

1.32 COOPERATION WITH OTHERS

The Government will perform maintenance work and will make every effort to have the area clear. The Contractor shall cooperate with other Contractors and the Government in using the area.

1.33 SCAFFOLDING

Any scaffolding, platform, ladder, stairway, or other access schemes proposed to be used shall be submitted for approval, including type, layout, and connections. Approved anti-slip surface material shall be installed on scaffolding platforms. Scaffolding shall comply in every respect with EM 385-1-1.

1.34 PROJECT REPORTING

Weekly reports shall be submitted by the Contractor giving project status and activities information. An updated CPM should be included in this report, if appropriate. This report shall include a written summary, accompanied with detailed information relating to current status of procurement, construction, and delivery activities compared to both the current project schedules and the schedule submitted at the time of the Request for Technical Proposal.

1.35 WEEKLY MEETINGS

Once each week, while on site, a general meeting will be held between the Contractor and the Government. This meeting will be used to discuss progress in the last week and work planned in the up coming week. A meeting time and place shall be mutually agreed upon.

1.36 NOT USED

1.37 PERMITS AND RESPONSIBILITIES

The Contractor shall, without additional expense to the Government, be responsible for obtaining any necessary licenses and permits, and for complying with any Federal, State, County, and municipal laws, codes, and regulations applicable to the performance of the work. The Contractor shall also be responsible for all damages to persons or property that occur as a result of the Contractor's fault or negligence, and shall take proper safety and health precautions to protect the work, workers, public, and property of others. The Contractor shall also be responsible for all materials delivered and work performed until completion and acceptance of the entire work, except for any completed unit of work which may have been accepted under the contract.

1.38 QUALITY CONTROL AT THE JOB SITE/POWERHOUSE

1.38.1 General

The Contractor shall maintain an effective quality control system in accordance with SECTION 01451. The Contractor's system shall encompass all actions involving selection of construction material sources and suppliers, on-site and off-site fabrication of Contractor-furnished items to be included in the work, on-site and off-site production of construction materials, work placement procedures, workmanship, inspection, and testing. The system shall provide the necessary supervision, inspection, and tests of all items of work, including that of its suppliers and subcontractors, that will assure the compliance of all work with applicable specifications and drawings in respect to the Contractor furnished equipment, materials, workmanship, construction, finish, functional performance, and identification. The Contractor's system shall encompass all management and supervisory actions taken by its staff that affect quality of the finished construction work, including all inspection controls and tests required for compliance with the contract, except for those inspections and tests specifically reserved to be accomplished by the Government.

1.38.2 Parts Control

A complete written record shall be maintained of the location and estimated date of return of all parts shipped from the project for repair. This record shall be available for review at all times.

PART 2 PRODUCTS AND PART 3 EXECUTION

(Not Used)

*****

PROJECT IDENTIFICATION SIGN

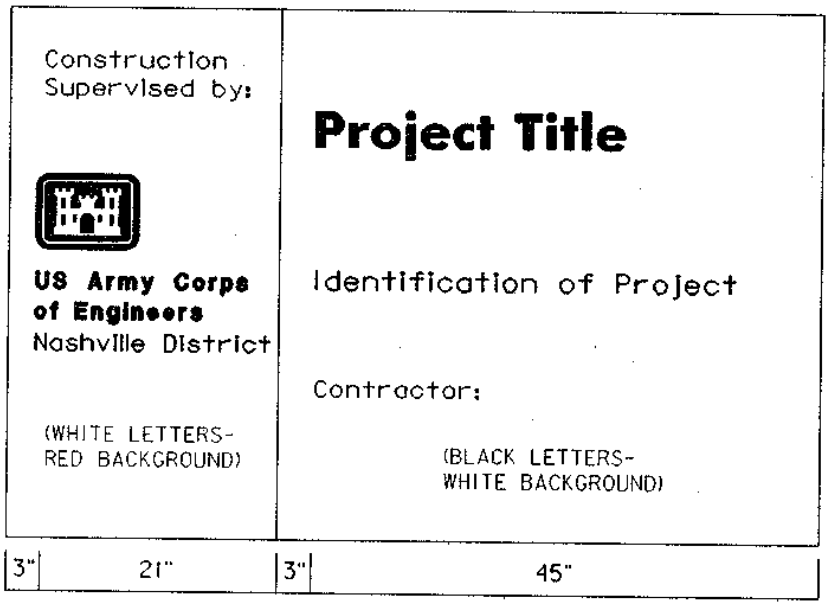

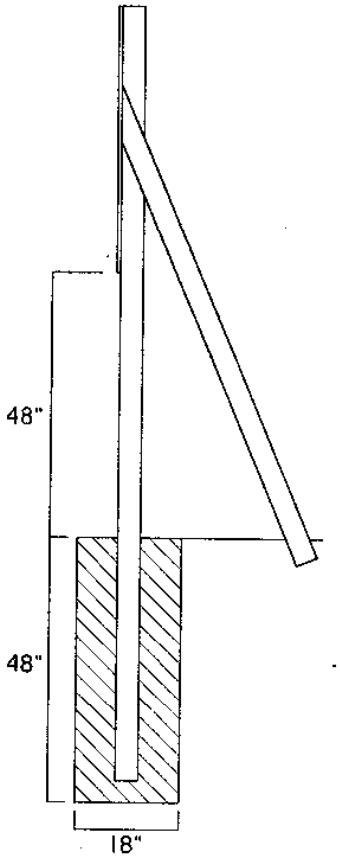

LEGEND GROUP 1: ONE-TO TWO-LINE DESCRIPTION OF CORPS RELATIONSHIP TO PROJECT.
COLOR: WHITE. TYPEFACE: 1.25" HELVETICA REGULAR MAXIMUM LINE LENGTH: 19".

LEGEND GROUP 2: DISTRICT NAME PLACED BELOW 10.5" REVERSE SIGNATURE (6" CASTLE).
COLOR: WHITE. TYPEFACE: 1.25" HELVETICA REGULAR.

LEGEND GROUP 3: ONE- TO THREE-LINE PROJECT TITLE LEGEND DESCRIBES THE WORK BEING DONE UNDER THIS CONTRACT. COLOR: BLACK. TYPEFACE: 3" HELVETICA BOLD MAXIMUM LINE LENGTH: 42".

LEGEND GROUP 4: ONE- TO TWO-LINE IDENTIFICATION OF PROJECT OR FACILITY (CIVIL WORKS).
TYPEFACE: 1.5" HELVETICA REGULAR MAXIMUM LINE LENGTH: 42".

CROSS-ALIGN THE FIRST LINE OF LEGEND GROUP 4 WITH THE FIRST LINE OF THE CORPS SIGNATURE (US ARMY CORPS) AS SHOWN.

LEGEND GROUPS 5: ONE- TO FIVE-LINE IDENTIFICATION OF PRIME CONTRACTORS INCLUDING: TYPE (GENERAL CONTRACTOR, ETC.), CORPORATE OR FIRM NAME, CITY, STATE.
COLOR: BLACK. TYPEFACE: 1.25" HELVETICA REGULAR MAXIMUM LINE LENGTH: 21".

ALL TYPOGRAPHY IS FLUSH LEFT AND RAG RIGHT, UPPER AND LOWER CASE WITH INITIAL CAPITALS ONLY AS SHOWN.

PANEL SIZE 4' X 6', POST SIZE 4" X 4", MOUNTING HEIGHT 48", COLOR BKG/LGD WH-RD/BK.

SAFETY PERFORMANCE SIGN

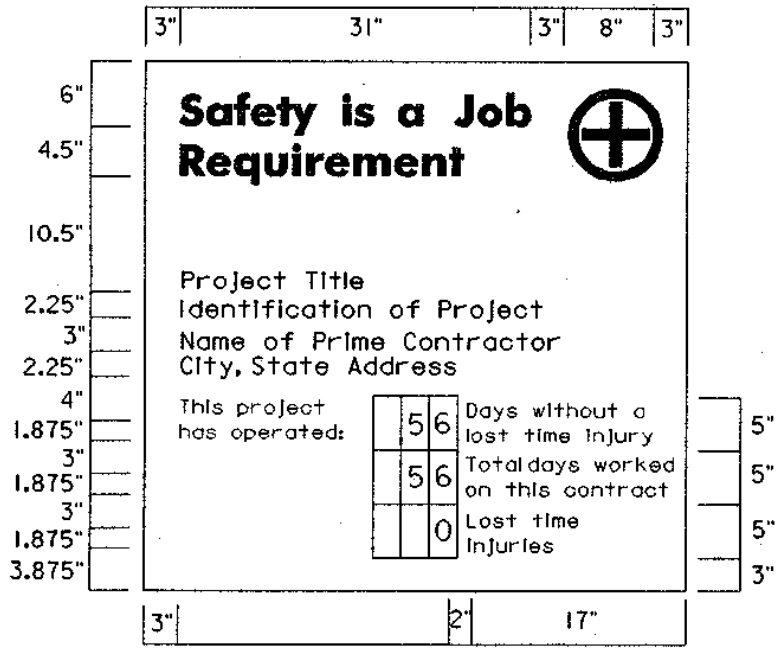

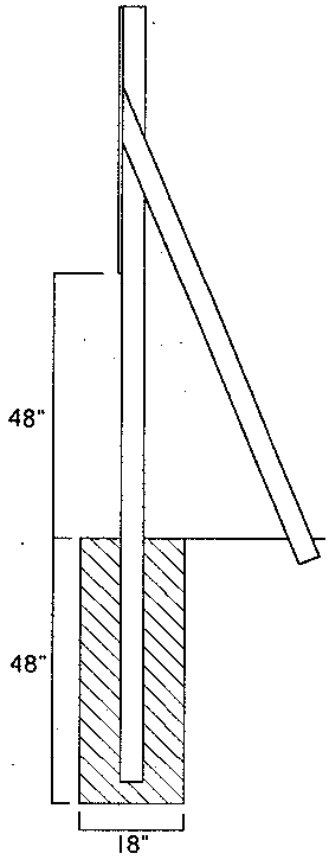

LEGEND GROUP 1: STANDARD TWO-LINE TITLE "SAFETY IS A JOB REQUIREMENT", WITH (8" OD.) SAFETY GREEN FIRST AID LOGO. TYPEFACE: 3" HELVETICA BOLD COLOR: BLACK.

LEGEND GROUP 2: ONE- TO TWO-LINE PROJECT TITLE LEGEND DESCRIBES THE WORK BEING DONE UNDER THIS CONTRACT AND NAME OF HOST PROJECT. COLOR: BLACK. TYPEFACE: 1.5" HELVETICA REGULAR MAXIMUM LINE LENGTH: 42".

LEGEND GROUP 3: ONE- TO TWO-LINE IDENTIFICATION: NAME OF PRIME CONTRACTOR AND CITY, STATE ADDRESS. COLOR: BLACK. TYPEFACE: 1.5" HELVETICA REGULAR MAXIMUM LINE LENGTH: 42".

LEGEND GROUP 4: STANDARD SAFETY RECORD CAPTIONS AS SHOWN. COLOR: BLACK. TYPEFACE: 1.25" HELVETICA REGULAR.

REPLACEABLE NUMBERS ARE TO BE MOUNTED ON WHITE .060 ALUMINUM PLATES AND SCREW-MOUNTED TO BACKGROUND. COLOR: BLACK. TYPEFACE: 3" HELVETICA REGULAR PLATE SIZE: 2.5" X 5.0".

ALL TYPOGRAPHY IS FLUSH LEFT AND RAG RIGHT. UPPER AND LOWER CASE WITH INITIAL CAPITALS ONLY AS SHOWN.

PANEL SIZE 4' X 4', POST SIZE 4" X 4", MOUNTING HEIGHT 48", COLOR BKG/LDG WH/BK-GR.

SECTION 01090

SOURCE OF REFERENCED PUBLICATIONS

TABLE OF CONTENTS

PART 1 GENERAL

1.1 STANDARD SPECIFICATIONS

PART 2 PRODUCTS

NOT REQUIRED

PART 3 EXECUTION

NOT REQUIRED

SECTION 01090

SOURCE OF REFERENCED PUBLICATIONS

PART 1 GENERAL

1.1 STANDARD SPECIFICATIONS

Standard specifications of the following authorities referenced herein may be obtained from the addresses listed below:

NAME	**ABREVIATION**
American Conference of Governmental Industrial Hygienists 1330 Camper Meadow Dr Cincinnati, OH 45240	ACGIH
American National Standards Institute, Inc. 11 West 42nd Street New York, NY 10036	ANSI
American Society of Mechanical Engineers Three Park Avenue New York, NY 10016-5990	ASME
American Society of Nondestructive Testing 1711 Arlington Lane P.O. Box 28518 Columbus, OH 43228-0518 Internet: http: www.asnt.org	ASNT
American Society for Testing and Materials 100 Barr Harbor Drive West Conshohocken, PA 19428-2959	ASTM
American Welding Society Inc. 550 N.W. LeJeune Road Miami, FL 33126	AWS
CORPS OF ENGINEERS Order from: U.S. Army Engineer Waterways Experiment Station ATTN: Technical Report Distribution Section, Services Branch, TIC 3909 Halls Ferry Rd. Vicksburg, MS 39180-6199	CRD
Defense Federal Acquistion Regulations Order From: Government Printing Office Washington, DC 20402	DFAR
Environmental Protection Agency Public Information Center 401 M St., SW Washington, DC 20460	EPA
Federal Acquisition Regulations Order From: Government Printing Office Washington, DC 20402	FAR

NAME	ABREVIATION
Federal Specifications and Standards Order from: General Services Administration Federal Supply Service Bureau 470 L'Enfant Plaza, S.W. Washington, DC 20407	FS
Military Specifications and Standards Order from: Standardization Documents Order Desk Building 4, Section D 700 Robbins Ave. Philadelphia, PA 19111-5094	MS
Mine Safety and Health Administration 620 Centeral Avenue Alameda, CA 94501	MSHA
National Electrical Manufacturers Association 1300 N. 17th St., Suite 1847 Rosslyn, VA 22209	NEMA
National Fire Protection Association One Batterymarch Park P.O. Box 9101 Quincy, MA 02269-9101	NFPA
National Institute of Occupational Safety & Health Mail Stop C-13 4676 Columbia Parkway Cincinnati, OH 45226-1998	NIOSH
US Department of Labor Occupational Safety and Health Administration 4676 Columbia Parkway Cincinnati, OH 45226	OSHA
Steel Structures Painting Council 40 24th Street, 6th Floor Pittsburgh, PA 15222-4656	SSPC
U.S. Army Corps of Engineers available from Superintendent of Documents U.S. Government Printing Office Washington, D.C. 20402	USACE

*****

SECTION 01270

MEASUREMENT AND PAYMENT

TABLE OF CONTENTS

PART 1 GENERAL

1.1 GENERAL INFORMATION
1.2 MEASUREMENT
1.3 PAYMENT

PART 2 PRODUCTS

(NOT USED)

PART 3 EXECUTION

(NOT USED)

SECTION 01270

MEASUREMENT AND PAYMENT

PART 1 GENERAL

1.1 GENERAL INFORMATION

In each instance the contract price for an item will constitute full compensation as herein specified, as shown, or as otherwise approved. The contract price and payment will also constitute full compensation for all work incidental to completion of the item, unless such work is otherwise specifically mentioned for separate payment under another bid item. In the event any work is required by the specification sections or by the drawings and not specifically mentioned in the measurement and payment paragraphs, separate or direct payment will not be made and all costs thereof are incidental to and included in the contract prices and payments for all items listed in the bid schedule.

1.2 MEASUREMENT

Items measured as a lump sum will be measured for payment as a completed job, in place, in the locations indicated. This measurement includes measurement of all incidental work and materials that are necessary to make a complete job. Unless the payment paragraph makes a specific exception of an item, incidental items will not be measured under another item, even though there is another listing for the work or material.

1.3 PAYMENT

Payment for all work specified, shown, or incidental to complete the work will be made as follows:

1.3.1 Base Items (Wolf Creek)

1.3.1.1 Crane Rehabilitation and Acceptance Testing

Payment shall include the furnishing of material, labor and equipment to rehabilitate the existing 250-ton bridge crane including inspections, acceptance testing, field training, installing safety cable along both corbels, asbestos removal, and lead-based paint removal and will be paid for under the contract lump sum price for “Wolf Creek Crane Rehabilitation and Acceptance Testing.”

1.3.1.2 Asbestos Abatement Work, Wolf Creek

The furnishing of material, labor, and equipment to perform asbestos abatement work in Wolf Creek, as set forth in SECTION 02080, will be paid for under the contract lump sum price for “Asbestos Abatement Work, Wolf Creek.” This will include consideration for all costs associated with bulk sampling, submittal preparation, asbestos work mobilization and demobilization, disposal of ACM, and services of certified asbestos abatement and air monitoring personnel.

1.3.1.3 Lead-Based Paint Removal and Disposal, Wolf Creek

The furnishing of material, labor and equipment required for the removal of lead-based paint and disposal, at Wolf Creek, will be paid for as a lump sum job under “Lead-Based Paint Removal and Disposal, Wolf Creek.”

1.3.1.4 Services of Skilled Craftsman, Wolf Creek

The furnishing of all equipment and labor for performing Government directed supplemental work, at Wolf Creek, will be paid for at the contract unit price per hour for “Skilled Craftsman Hire, Wolf Creek", which price and payment will constitute full compensation for the directed work including supervision, helper labor, and overhead costs.

1.3.1.5 Weld Inspections, Wolf Creek

All weld inspections that the Contractor is required to do at Wolf Creek as part of Contractor Quality Control (CQC) Welding Program, as specified elsewhere, shall be included in the contract price and no separate payment will be made.

a. Weld Inspections, Wolf Creek. The furnishing of all equipment and personnel to perform directed weld inspection, at Wolf Creek, will be paid for at the appropriate contract unit price per foot for “Radiographic Weld Inspection, Wolf Creek,” “Ultrasonic Weld Inspection, Wolf Creek,” “Magnetic Particle Weld Inspection, Wolf Creek,” or “Dye Penetrant Weld Inspection, Wolf Creek.” If the GQAR weld inspection reveals unacceptable defects in the work inspected in accordance with the specifications the cost of the initial test, the cost of repair and handling, and the cost of all subsequent tests shall be borne by the Contractor, at no additional cost to the Government.

b. Trips by Radiographic Inspection Agency, Wolf Creek. Trips from the inspection agency to the Contractor facility or Government work site and back to the inspection agency for Government-directed radiographic inspection, at Wolf Creek, will be paid at the contract unit price per each for “Trips by Radiographic Inspection Agency, Wolf Creek,” which price includes all overhead costs.

c. Handling for Radiographic Inspection, Wolf Creek. The furnishing of all equipment and personnel to handle material for Government-directed radiographic inspection, at Wolf Creek, will be paid for at the contract unit price per hour for “Handling for Radiographic Inspection, Wolf Creek,” which shall include supervision and overhead costs. The GQAR will certify that the number of man-hours charged is acceptable.

1.3.2 Option Items (Center Hill)

1.3.2.1 Center Hill Crane Rehabilitation and Acceptance Testing

Payment shall include the furnishing of material, labor and equipment to rehabilitate the existing 250 ton bridge crane including inspections, acceptance testing, field training, installing safety cable along both corbels, asbestos removal, and lead-based paint removal, and will be paid for under the contract lump sum price for “Center Hill Crane Rehabilitation and Acceptance Testing.”

1.3.2.2 Asbestos Abatement Work, Center Hill

The furnishing of material, labor, and equipment to perform asbestos abatement work in Center Hill, as set forth in SECTION 02080, will be paid for under the contract lump sum price for “Asbestos Abatement Work, Center Hill.” This will include consideration for all costs associated with bulk sampling, submittal preparation, asbestos work mobilization and demobilization, disposal of ACM, and services of certified asbestos abatement and air monitoring personnel.

1.3.2.3 Lead-Based Paint Removal and Disposal, Center Hill

The furnishing of material, labor and equipment required for the removal of lead-based paint and disposal, at Center Hill, will be paid for as a lump sum job under “Lead-Based Paint Removal and Disposal, Center Hill.”

1.3.2.4 Services of Skilled Craftsman, Center Hill

The furnishing of all equipment and labor for performing Government directed supplemental work, at Center Hill, will be paid for at the contract unit price per hour for “Skilled Craftsman Hire, Center Hill", which price and payment will constitute full compensation for the directed work including supervision, helper labor, and overhead costs.

1.3.2.5 Weld Inspections, Center Hill

All weld inspections that the Contractor is required to do at Center Hill as part of Contractor Quality Control (CQC) Welding Program, as specified elsewhere, shall be included in the contract price and no separate payment will be made.

a. Weld Inspections, Center Hill. The furnishing of all equipment and personnel to perform directed weld inspection, at Center Hill, will be paid for at the appropriate contract unit price per foot for “Radiographic Weld Inspection, Center Hill,” “Ultrasonic Weld Inspection, Center Hill,” “Magnetic Particle Weld Inspection, Center Hill,” or “Dye Penetrant Weld Inspection, Center Hill.” If the GQAR weld inspection reveals unacceptable defects in the work inspected in accordance with the specifications the cost of the initial test, the cost of repair and handling, and the cost of all subsequent tests shall be borne by the Contractor, at no additional cost to the Government.

b. Trips by Radiographic Inspection Agency, Center Hill. Trips from the inspection agency to the Contractor facility or Government work site and back to the inspection agency for Government-directed radiographic inspection, at Center Hill, will be paid at the contract unit price per each for “Trips by Radiographic Inspection Agency, Center Hill,” which price includes all overhead costs.

c. Handling for Radiographic Inspection, Center Hill. The furnishing of all equipment and personnel to handle material for Government-directed radiographic inspection, at Center Hill, will be paid for at the contract unit price per hour for “Handling for Radiographic Inspection, Center Hill,” which shall include supervision and overhead costs. The GQAR will certify that the number of man-hours charged is acceptable.

PART 2 PRODUCTS

(NOT USED)

PART 3 EXECUTION

(NOT USED)

END OF SECTION 01270

SECTION 01330

SUBMITTAL PROCEDURES

TABLE OF CONTENTS

PART 1 GENERAL

1.1 SUBMITTAL DESCRIPTION
1.2 REFERENCES
1.3 SUBMITTAL CLASSIFICATION
1.4 APPROVED SUBMITTALS
1.5 DISAPPROVED SUBMITTALS
1.6 WITHHOLDING OF PAYMENTS

PART 2 PRODUCTS

(NOT USED)

PART 3 EXECUTION

3.1 ENG FORMS 4288 AND 4025
3.2 SCHEDULING
3.3 SUBMITTAL PROCEDURE
3.4 CONTROL OF SUBMITTALS
3.5 "GOVERNMENT-APPROVED" SUBMITTALS
3.6 "INFORMATION ONLY" SUBMITTALS
3.7 STAMPS
3.8 CERTIFICATES OF COMPLIANCE
3.9 CONTRACTOR'S FILES

SECTION 01330

SUBMITTAL PROCEDURES

PART 1 GENERAL

1.1 SUBMITTAL DESCRIPTIONS

The submittals described below are those required and are further described in other sections of the specifications. Submittals required by the CONTRACT CLAUSES and other nontechnical parts of the contract are not included in this section.

SD-01 Data

Submittals which provide calculations, descriptions, or documentation regarding the work.

SD-04 Drawings

Submittals which graphically show relationship of various components of the work, schematic diagrams of systems, details of fabrication, layouts of particular elements, connections, and other relational aspects of the work. All drawings shall be submitted in both paper and electronic formats.

SD-06 Instructions

Preprinted material describing installation of a product, system or material, including special notices and material safety data sheets, if any, concerning impedance's, hazards, and safety precautions. Operation and maintenance manuals are considered deliverables under the contract and not submittals; however, when necessary to review information to be included in the final manuals such information to be included in the final manuals should be called for under this submittal description.

SD-07 Schedules

Tabular lists showing location, features, or other pertinent information regarding products, materials, equipment, or components to be used in the work.

SD-08 Statements

A document, required of the Contractor, or through the Contractor, from a supplier, installer, manufacturer, or other lower tier Contractor, the purpose of which is to confirm the quality or orderly progression of a portion of the work by documenting procedures, acceptability of methods or personnel, qualifications, or other verifications of quality.

SD-09 Reports

Reports of inspections or tests, including analysis and interpretation of test results. Each report shall be properly identified. Test methods used shall be identified and test results shall be recorded.

SD-13 Certificates

Statement signed by an official authorized to certify on behalf of the manufacturer of a product, system or material, attesting that the product, system or material meets specified requirements. The statement must be dated after the award of this contract, must state the Contractor's name and address, must name the project and location, and must list the specific requirements which are being certified.

SD-14 Samples

Samples, including both fabricated and unfabricated physical examples of materials, products, and units of work as complete units or as portions of units of work.

SD-18 Records

Documentation to record compliance with technical or administrative requirements.

1.2 REFERENCES

Refer to the Transmittal Form (ENG Form 4025, Attachment 3 located at back of specifications package) or the Submittal Register (ENG Form 4288, Attachment 2) for further information on terms discussed in this section.

1.3 SUBMITTAL CLASSIFICATION

Submittals are classified as follows:

a. Government-Approved.

(1) Extension of design which require Government approval such as Contractor's, manufacturer's, or fabricator's drawings; descriptive literature included but not limited to catalog cuts, diagrams; operating charts or curves; critical materials; test cylinders; samples; warranties; deviations; equipment whose compatibility with the entire system must be checked will be listed on the ENG Form 4288. Within the terms of SECTION 00700, Clause SPECIFICATIONS AND DRAWINGS FOR CONSTRUCTION, these submittals are also considered to be "shop drawings."

(2) Other items (such as environmental plans, safety plans, Contractor Quality Control (CQC) plans, etc.) designated in the requirements in the technical sections be "submitted for approval" which do not fall under the definitions in paragraph 1.3(a)(1) will not be listed on ENG Form 4288, but will be transmitted as instructed.

b. Information Only. Any submittals on ENG Form 4288 not requiring Government approval (such as certifications and test results, etc.) will be submitted for "information only." See paragraph 3.8 for further information on certificates and test reports. They are not considered to be "shop drawings" within the terms of the Contract Clause referred to at the end of paragraph 1.3(a)(1).

1.4 APPROVED SUBMITTALS

All submittals for Government approval shall be Contractor-approved first and stamped as shown in paragraph 3.7. The approval of submittals

by the Government shall not be construed as a complete check, but will indicate only that the general method of construction, materials, detailing, and other information are satisfactory. Approval will not relieve the Contractor of the responsibility for any error which may exist, as the Contractor under the CQC requirements of this contract is responsible for the dimensions and design of adequate connections, details, and satisfactory construction of all work. After submittals have been Government-approved no resubmittal for the purpose of substituting materials or equipment will be given consideration unless accompanied by an explanation as to why a substitution is necessary.

1.5 DISAPPROVED SUBMITTALS

The Contractor shall make all corrections required and promptly furnish a corrected submittal in the form and number of copies as specified for the initial submittal. If the Contractor considers any correction indicated on the submittals to constitute a change to the contract, notice as required under SECTION 00700, Clause CHANGES, shall be given promptly to the Government.

1.6 WITHHOLDING OF PAYMENTS

Payments for materials incorporated in the work will not be made if required approvals have not been obtained.

PART 2 PRODUCTS

(NOT USED)

PART 3 EXECUTION

3.1 ENG FORMS 4288 AND 4025 (Attachments 2 and 3)

3.1.1 General

All items listed on ENG Form 4288 (Attachment 2) shall be submitted using ENG Form 4025 (Attachment 3). The Government may request submittals in addition to those listed or specified when deemed necessary to adequately describe the work covered in the respective sections. Units of weights and measures used on all submittals shall be the same used in the contract drawings. Each submittal shall be complete and in sufficient detail to allow ready determination of compliance with contract requirements. Prior to submittal, all items shall be checked and approved by the Contractor's Quality Control Representative (CQCR), and each respective transmittal item shall be stamped, signed, and dated by the CQCR, as shown in paragraph 3.7, certifying that the accompanying submittal complies with the contract requirements. Proposed deviations from the contract requirements shall be clearly identified as stated in paragraph 3.3.2. Submittals requiring Government approval shall be scheduled and made prior to the acquisition of the material or equipment covered thereby.

3.1.2 Submittal Register (ENG Form 4288)

See Attachment 2 for one set of ENG Form 4288 listing both "Government-Approved" and "information only" items. Columns "c" through "o" have been completed by the Government. The Contractor shall complete columns "a," "b," and "p" through "u" and return two completed copies for approval within 30 calendar days after Notice to Proceed. The approved

submittal register will become the scheduling document and will be used to control submittals to the items described in paragraph 1.3 (a)(1) throughout the life of the contract. The list is not all inclusive and additional submittals may be required by other parts of the contract. This register and the progress schedules shall be coordinated.

3.1.3 Transmittal Form (ENG Form 4025)

See Attachment 3 for ENG Form 4025 to be used for submitting both "Government approved" and "information only" submittals listed on ENG Form 4288. These forms will be furnished to the Contractor. Each submission of drawings by the Contractor must be accompanied by Transmittal Form 4025 containing a list of drawings giving titles and numbers. Transmittals containing one of the black and white copies of drawings and a copy of the Transmittal Form 4025 shall be addressed to "District Engineer, U.S. Army Corps of Engineers, Nashville District. Two black and white copies of drawings and a copy of the Transmittal Form 4025 shall be sent to "U.S. Army Corps of Engineers, Nashville District". Action on these drawings will be in accordance with the instructions on the reverse side of ENG Form 4025. See paragraph 3.5 for Government approval of submittals.

3.2 SCHEDULING

Submittals covering component items forming a system or items that are interrelated shall be scheduled to be coordinated and submitted concurrently. Certifications in accordance with paragraph 3.8, to be submitted with the pertinent drawings shall be so scheduled.

3.3 SUBMITTAL PROCEDURE

3.3.1 "Shop Drawing" Procedures

(See paragraph 1.3(a)(1) for definition of "shop drawing.")

3.3.1.1 General

The procedure for "shop drawings" shall be as follows:

a. "Shop Drawings" Approved by Contractor. All "shop drawings" submittals shall be reviewed and corrected to make them complete and in accordance with the contract. Approval shall be indicated on each drawing by an "Approved" stamp as shown in paragraph 3.7. Names and titles of individuals authorized by the Contractor to approve drawings shall be provided prior to any submission. All shop drawings shall be submitted as indicated herein. Submittals which are not required to be approved by the Government ("information only") will be monitored and spot-checks will be made. When such checks indicate noncompliance, the Contractor will be notified by the same method used for Government approvals.

b. "Shop Drawings" Approved by the Government. Before submission the Contractor shall review and approve all "shop drawings" prepared by subcontractors, suppliers, and the Contractor for completeness and compliance with plans and specifications, and shall so certify by stamp on each drawing or item of printed material. (Red markings are reserved for the Government.) Suppliers or subcontractors certifications are not acceptable as meeting this requirement. Submittals will be reviewed and processed as follows (the following action codes are to further define only the referenced codes on the reverse side of ENG Form 4025):

(1) Action Code A (Approved as Submitted). Shop drawings which can be approved without correction will be stamped "Approved" and one print or copy of catalog and other printed data, will be returned to the Contractor.

(2) Action Code B (Approved, Except as Noted, Resubmission Not Required). Shop drawings which have only minor discrepancies will be corrected and stamped "Approved as Corrected" or "Except as Noted." Corrections will be identified and one print or one copy of catalog or other printed data will be returned to the Contractor.

(3) Action Code C (Approved, Except as Noted, Resubmission Required). Shop drawings which are incomplete or require more than minor corrections will be marked in red to indicate necessary corrections. One print or one copy of catalog and other printed data will be returned to the Contractor stamped "Approved Except as Noted”.

(4) Action Code E (Disapproved). One print of shop drawings which are fundamentally in error, cover wrong equipment or construction, or require extensive corrections will be returned to the Contractor stamped "Disapproved." An explanation will be furnished on the print or on ENG Form 4025 indicating reason for disapproval.

c. Resubmittal. Resubmittal will not be required for drawings with Action Code A or B unless subsequent changes are made by the Contractor or by a contract modification. For drawings with Action Code C or E, corrections required shall be made, any changes shall be noted by dating the revisions to correspond with the change request date, and the drawings shall be promptly resubmitted for review. Government costs incurred after the first resubmittal will be charged to the Contractor.

3.3.1.2 "Shop Drawings" Submittal

3.3.1.2.1 General

ENG Form 4025 shall be in two copies used for transmitting "shop drawings" submittals. three black and white copies of each drawing shall be submitted for approval. Two copies of all shop drawings will be retained by the Contracting Officer, and one copy will be returned to the Contractor.

3.3.1.2.2 Drawings Format

To maintain the standardization of drawing sizes, and the uniform location of features on drawings, all drawings submitted for approval under this contract shall be nominally 22 inches high by 34 inches wide, (D size or metric A1 size drawings). The title block shall be in the lower right-hand corner, and shall contain the subcontractor's or fabricator's name, contract number, description of item(s), bid item number, verification block to indicate drawing has been reviewed and approved by Contractor, and a revision block. Next to the title block shall be a blank space, approximately 3 inches (8 cm) wide by 2 inches (5 cm) high, for use by the Contracting Officer.

3.3.2 Deviations

For submittals which include proposed deviations requested, the column "variation" of ENG Form 4025 shall be checked. The reason for any deviations shall be set forth in writing and such deviations annotated on the submittal. The Government reserves the right to rescind inadvertent approval of submittals containing unnoted deviations.

3.3.3 Other Submittals

All requirements for "shop drawings" under paragraphs 3.3.1.1 and 3.3.1.2 shall apply to catalog cuts, illustrations, printed specifications, or other data submitted except that five copies for Government approval and three copies for information only shall be submitted. Submittals shall be made on 8 1/2- by 11-inch paper. Inapplicable portions shall be marked out and applicable items such as model numbers, sizes, and accessories shall be indicated. Decisions on these other submittals will be given in accordance with paragraph 3.5.

3.4 CONTROL OF SUBMITTALS

The Contractor's procurement operations shall be carefully controlled to ensure that each individual submittal is made on or before the Contractor scheduled submittal date shown on the approved ENG Form 4288.

3.5 "GOVERNMENT-APPROVED" SUBMITTALS

Decisions on the submittals will be given by letter. Within 30 calendar days after receipt, one copy will be returned to the Contractor marked "Approved," "Approved, Except as Noted," "Disapproved," or "Returned for Correction." The notations "Approved" and "Approved, Except as Noted" authorize the Contractor to proceed with the work covered by such drawings, subject to the corrections if any, indicated thereon or described in the letter of transmittal. When prints of drawings have been "Returned for Correction," the Contractor shall make the necessary revisions on the drawings and shall resubmit one reproducible and four copies for approval in the same routine as before. Every revision made during the life of the contract shall be shown by number, date, and subject in a revision block and a notation shall be made in the drawing margin to permit rapid location of the revision. The time consumed by the Contractor in submitting and obtaining approval of assembly and shop drawings shall be included in the time allowed for completion of the contract.

3.6 "INFORMATION ONLY" SUBMITTALS

Normally submittals for "information only" will not be returned. Government approval is not required on information only submittals. These submittals will be used for information purposes. The Government reserves the right to require the Contractor to resubmit any item found not to comply with the Contract. This does not relieve the Contractor from the obligation to furnish material conforming to the plans and specifications and will not prevent the Government from requiring removal and replacement if nonconforming material is incorporated in the work. This does not relieve the Contractor of the requirement to furnish samples for testing by the Government laboratory or check testing by the Government in those instances where the technical specifications so prescribe.

3.7 STAMPS

Stamps used by the Contractor on the submittal data to certify that the submittal meets the contract requirements shall be "similar" to the following:

CONTRACTOR (Firm Name) ____ Approved ____ Approved with corrections as noted on submittal data and/or attached sheet(s). SIGNATURE: TITLE: DATE:

3.8 CERTIFICATES OF COMPLIANCE

Certificates required for demonstrating proof of compliance of materials with specification requirements shall be executed in the original and two copies. Each certificate shall be signed by an official authorized to certify in behalf of the manufacturing company and shall contain the name and address of the Contractor, the project name and location, and the quantity and date or dates of shipment or delivery to which the certificates apply. Copies of laboratory test reports submitted with certificates shall contain the name and address of the testing laboratory and the date or dates of the tests to which the report applies. Certification shall not be construed as relieving the Contractor from furnishing satisfactory material if, after tests are performed on selected samples, the material is found not to meet the specific requirements.

3.9 CONTRACTOR'S FILES

"Approved" and "Approved as Corrected" (Action Codes A and B) drawing files shall be maintained in fabrication shops and at field sites for Government use.

*****

TRANSMITTAL OF SHOP DRAWINGS, EQUIPMENT DATA, MATERIAL SAMPLES, OR MANUFACTURER'S CERTIFICATES OF COMPLIANCE

(Read instructions on the reverse side prior to initiating this form)

DATE	TRANSMITTAL NO.

SECTION I - REQUEST FOR APPROVAL OF THE FOLLOWING ITEMS *(This section will be initiated by the contractor)*

TO:	FROM:	CONTRACT NO.	CHECK ONE: ☐ THIS IS A NEW TRANSMITTAL ☐ THIS IS A RESUBMITTAL OF TRANSMITTAL _____
SPECIFICATION SEC. NO. *(Cover only one section with each transmittal)*	PROJECT TITLE AND LOCATION		CHECK ONE: THIS TRANSMITTAL IS FOR ☐ FIO ☐ GOV'T. APPROVAL

ITEM NO. *a.*	DESCRIPTION OF ITEM SUBMITTED *(Type size, model number/etc.)* *b.*	MFG OR CONTR. CAT., CURVE DRAWING OR BROCHURE NO. *(See instruction no. 8)* *c.*	NO. OF COPIES *d.*	CONTRACT REFERENCE DOCUMENT: SPEC. PARA. NO. *e.*	CONTRACT REFERENCE DOCUMENT: DRAWING SHEET NO. *f.*	FOR CONTRACTOR USE CODE *g.*	VARIATION *(See instruction No. 6)* *h.*	FOR CE USE CODE *i.*

REMARKS

I certify that the above submitted items have been reviewed in detail and are correct and in strict conformance with the contract drawings and specifications except as other wise stated.

_____

NAME AND SIGNATURE OF CONTRACTOR

SECTION II - APPROVAL ACTION

ENCLOSURES RETURNED *(List by Item No.)*	NAME, TITLE AND SIGNATURE OF APPROVING AUTHORITY	DATE

INSTRUCTIONS

1. Section I will be initiated by the Contractor in the required number of copies.

2. Each transmittal shall be numbered consecutively in the space provided for "Transmittal No.". This number, in addition to the contract number, will form a serial number for identifying each submittal. For new submittals or resubmittals mark the appropriate box; on resubmittals, insert transmittal number of last submission as well as the new submittal number.

3. The "Item No." will be the same "Item No." as indicated on ENG FORM 4288-R for each entry on this form.

4. Submittals requiring expeditious handling will be submitted on a separate form.

5. Separate transmittal form will be used for submittals under separate sections of the specifications.

6. A check shall be placed in the "Variation" column when a submittal is not in accordance with the plans and specifications--also, a written statement to that effect shall be included in the space provided for "Remarks".

7. Form is self-transmittal, letter of transmittal is not required.

8. When a sample of material or Manufacturer's Certificate of Compliance is transmitted, indicate "Sample" or "Certificate" in column c, Section I.

9. U.S. Army Corps of Engineers approving authority will assign action codes as indicated below in space provided in Section I, column i to each item submitted. In addition they will ensure enclosures are indicated and attached to the form prior to return to the contractor. The Contractor will assign action codes as indicated below in Section I, column g, to each item submitted.

THE FOLLOWING ACTION CODES ARE GIVEN TO ITEMS SUBMITTED

A -- Approved as submitted.

B -- Approved, except as noted on drawings.

C -- Approved, except as noted on drawings. Refer to attached sheet resubmission required.

D -- Will be returned by separate correspondence.

E -- Disapproved (See attached).

F -- Receipt acknowledged.

FX -- Receipt acknowledged, does not comply as noted with contract requirements.

G -- Other *(Specify)*

10. Approval of items does not relieve the contractor from complying with all the requirements of the contract plans and specifications.

SUBMITTAL REGISTER

(ER 415-1-10)

CONTRACT NO:

TITLE AND LOCATION:
Wolf Creek Powerhouse 250 Ton Bridge Crane Rehabilation

CONTRACTOR:

SPECIFICATION SECTION:

TRANSM-ITTAL NO. A.	ITEM NO B.	SPECIFICA-TION PARA-GRAPH NUMBER C.	DESCRIPTION OF ITEM SUBMITTED D.	TYPE OF SUBMITTAL: DATA E.	DRAWINGS F.	INSTRUCTIONS G.	SCHEDULES H.	STATMENTS I.	REPORTS J.	CERTIFICATES K.	SAMPLES L.	RECORDS M.	CLASSI-FICATION: INFORMATION ONLY N.	GOVERNMENT APPROVED O.	REVIEWER (ORG CODE) P.	CONTRACTOR SCHEDULE DATES: SUBMIT Q.	APPROVAL NEEDED BY R.	MATERIAL NEEDED BY S.	CONTRACTOR ACTION: CODE T.	DATE U.	SUBMIT TO GOVERNMENT V.	GOVERNMENT ACTION: CODE W.	DATE X.	REMARKS Y.
			SECTION 01010																					
		1.3	Supervisor Qualifications	X									X			30 days								
			Organization Chart	X									X			30 days								
			Employee Procedure	X									X			30 days								
			List of Employees	X									X			14 days								
			Roadway Access	X									X			14 days								
			Working Hours	X										X		7 days								
			Site Work Schedule	X										X		30 days								
			Cntl of Hazardous Materials	X										X		14 days								
			Temp Electrial Powerlines	X										X		30 days								
			Transportation of Heavy Equipment	X										X		30 days								
			Indoor Storage Locations	X										X		30 days								
			Dust & Fume Control	X										X		30 days								
			Off-site Disposal Area	X										X		30 days								
			Access Equipment	X										X		30 days								
			Project Status	X									X											Required once a week
			Records of Parts Removed from Site					X					X											Available fro review at all time
			Schedule Change Request					X						X		48 hrs								
			Request for Drawings & Data					X					X			7 days								
			Notification of Damaged equipment					X					X											Immediately after Discovery

SUBMITTAL REGISTER

(ER 415-1-10)

CONTRACT NO:

TITLE AND LOCATION:
Wolf Creek Powerhouse 250 Ton bridge Crane Rehabilitation

CONTRACTOR:

SPECIFICATION SECTION:

TRANSM-ITTAL NO. A.	ITEM NO B.	SPECIFICA-TION PARA-GRAPH NUMBER C.	DESCRIPTION OF ITEM SUBMITTED D.	TYPE OF SUBMITTAL: DATA E.	DRAWINGS F.	INSTRUCTIONS G.	SCHEDULES H.	STATMENTS I.	REPORTS J.	CERTIFICATES K.	SAMPLES L.	RECORDS M.	CLASSI-FICATION: INFORMATION ONLY N.	GOVERNMENT APPROVED O.	REVIEWER (ORG CODE) P.	CONTRACTOR SCHEDULE DATES: SUBMIT Q.	APPROVAL NEEDED BY R.	MATERIAL NEEDED BY S.	CONTRACTOR ACTION: CODE T.	DATE U.	SUBMIT TO GOVERNMENT V.	GOVERNMENT ACTION: CODE W.	DATE X.	REMARKS Y.
			SECTION 01307																					
			Final As-Built drwings		X									X		90 days								
			CADD File Conversion		X									X		90 days								
			SECTION 01350																					
		1.3	Environmental Protection Plan	X										X		20 days								
			SECTION 01451																					
		1.3	Qualaity Control Plan	X										X		10 days								
			SECTION 01600																					
		1.3	Crane Inspect,Craftsmen & Crane Op.	X										X										
			Complete Rehab Procedure	X										X										
			Pre-Rehab Inspection Procedure	X										X										
			Post-Rehab Inspection Procedure	X										X										
			Acceptance Tests	X										X										
			Test Weight Handling Procedure	X										X										
			Detailed Dwgs of Test Weight Configuration	X										X										
			Pre-Rehab Inspection Report						X				X											
			Post-Rehab Inspection Report						X				X											
			Preliminary No-Load Test Results						X					X										

SUBMITTAL REGISTER

(ER 415-1-10)

CONTRACT NO:

TITLE AND LOCATION:
Wolf Creek Powerhouse 250 Ton Bridge Crane Rehabilitation

CONTRACTOR:

SPECIFICATION SECTION:

TRANSM-ITTAL NO. A.	ITEM NO B.	SPECIFICA-TION PARA-GRAPH NUMBER C.	DESCRIPTION OF ITEM SUBMITTED D.	TYPE OF SUBMITTAL: DATA E.	DRAWINGS F.	INSTRUCTIONS G.	SCHEDULES H.	STATMENTS I.	REPORTS J.	CERTIFICATES K.	SAMPLES L.	RECORDS M.	CLASSI-FICATION: INFORMATION ONLY N.	GOVERNMENT APPROVED O.	REVIEWER (ORG CODE) P.	CONTRACTOR SCHEDULE DATES: SUBMIT Q.	APPROVAL NEEDED BY R.	MATERIAL NEEDED BY S.	CONTRACTOR ACTION: CODE T.	DATE U.	SUBMIT TO GOVERNMENT V.	GOVERNMENT ACTION: CODE W.	DATE X.	REMARKS Y.
			SECTION 02080																					
		1.4	Mfg's Data	X										X										
			Sample Plan	X										X										
			Bulk Sampling Results	X										X										
			Asbestos Plan	X										X										
			Testing Lab & Air Monitoring Personnel	X										X										
			Industrial Hygienist	X										X										
			Training	X									X											
			Medical Exam	X									X											
			Respirator Fit Test	X									X											
			Permits & Notification	X									X											
			Waste Disposal Site	X									X											
			Insurance	X									X											
			Previous Citations	X									X											
			Work Site Entry	X									X											
			Daily Narrative Log	X									X											
			Pressure Differential Recordings	X									X											
			Air Monitoring Results	X									X											
			Waste Shipment Record	X									X											

SUBMITTAL REGISTER

(ER 415-1-10)

CONTRACT NO:

TITLE AND LOCATION:
Wolf Creek Powerhouse 250 Ton Bridge Crane Rehabilitation

CONTRACTOR:

SPECIFICATION SECTION:

TRANSM-ITTAL NO. A.	ITEM NO B.	SPECIFICA-TION PARA-GRAPH NUMBER C.	DESCRIPTION OF ITEM SUBMITTED D.	TYPE OF SUBMITTAL: DATA E.	DRAWINGS F.	INSTRUCTIONS G.	SCHEDULES H.	STATMENTS I.	REPORTS J.	CERTIFICATES K.	SAMPLES L.	RECORDS M.	CLASSI-FICATION: INFORMATION ONLY N.	GOVERNMENT APPROVED O.	REVIEWER (ORG CODE) P.	CONTRACTOR SCHEDULE DATES: SUBMIT Q.	APPROVAL NEEDED BY R.	MATERIAL NEEDED BY S.	CONTRACTOR ACTION: CODE T.	DATE U.	SUBMIT TO GOVERNMENT V.	GOVERNMENT ACTION: CODE W.	DATE X.	REMARKS Y.
			SECTION 02120																					
		1.3	On-site Hazardous Waste Management	X										X										Prior to start of work
			Off-Site Hazardous Waste Management	X										X										Prior to start of work
			Record Keeping						X					X										Necessary to file annual reports
			Spill Response						X				X											Notify immediately
			Exception Reports						X					X		35 days								
			Qualifications							X			X											
			Off-site Policy Compliance Certs							X			X											
			Certificates of Disposal							X			X			180 days								
			Shipping Documents							X				X		14 days								
			Notice of Non-Compliance & Violation									X	X											Notify Immediately
			SECTION 05101																					
		1.3	Shop Drawings		X									X										
			Schedule of Welding Procedures a-d				X							X										3 copies of complete schedules
			SECTION 05502																					
		1.3	Materials List	X										X										
			Detail Drawings		X									X										

SUBMITTAL REGISTER

(ER 415-1-10)

CONTRACT NO:

TITLE AND LOCATION:
Wolf Creek Powerhouse 250 Ton Bridge Crane Rehabilaitation

CONTRACTOR:

SPECIFICATION SECTION:

TRANSM-ITTAL NO. A.	ITEM NO B.	SPECIFICA-TION PARA-GRAPH NUMBER C.	DESCRIPTION OF ITEM SUBMITTED D.	TYPE OF SUBMITTAL: DATA E.	DRAWINGS F.	INSTRUCTIONS G.	SCHEDULES H.	STATMENTS I.	REPORTS J.	CERTIFICATES K.	SAMPLES L.	RECORDS M.	CLASSI-FICATION: INFORMATION ONLY N.	GOVERNMENT APPROVED O.	REVIEWER (ORG CODE) P.	CONTRACTOR SCHEDULE DATES: SUBMIT Q.	APPROVAL NEEDED BY R.	MATERIAL NEEDED BY S.	CONTRACTOR ACTION: CODE T.	DATE U.	SUBMIT TO GOVERNMENT V.	GOVERNMENT ACTION: CODE W.	DATE X.	REMARKS Y.
			Test Reports						X				X											
			Disposition									X	X											
			SECTION 09900																					
		1.3	Notification of Paint Batch Sampling					X					X			48 hrs								
			Qualifications & Experience					X						X		48 hrs								
			Airborne Sampling Results					X						X										
			Ventilation Assessment					X						X										
			Containment Plan					X						X										
			Water Quality Plan					X						X		24 hrs								
			Certified Test Reports of Paints & Thinners						X				X			30 days								
			Paints & Thinnners								X			X		30 days								
			SECTION 15000																					
		1.3	Descriptive Data	X										X										
			Computations	X										X										
			Drawings , a-b		X									X										
			SECTION 16050																					
		1.3	Motors a-c	X										X										

SUBMITTAL REGISTER

(ER 415-1-10)

CONTRACT NO:

TITLE AND LOCATION:
Wolf Creek Powerhouse 250 Ton Bridge Crane Rehabilitation

CONTRACTOR:

SPECIFICATION SECTION:

TRANSM-ITTAL NO. A.	ITEM NO B.	SPECIFICA-TION PARA-GRAPH NUMBER C.	DESCRIPTION OF ITEM SUBMITTED D.	TYPE OF SUBMITTAL: DATA E.	DRAWINGS F.	INSTRUCTIONS G.	SCHEDULES H.	STATMENTS I.	REPORTS J.	CERTIFICATES K.	SAMPLES L.	RECORDS M.	CLASSI-FICATION: INFORMATION ONLY N.	GOVERNMENT APPROVED O.	REVIEWER (ORG CODE) P.	CONTRACTOR SCHEDULE DATES: SUBMIT Q.	APPROVAL NEEDED BY R.	MATERIAL NEEDED BY S.	CONTRACTOR ACTION: CODE T.	DATE U.	SUBMIT TO GOVERNMENT V.	GOVERNMENT ACTION: CODE W.	DATE X.	REMARKS Y.
			Brakes, a-b	X										X										
			Control System Drives, Radio Equip,a-f	X										X										
			Limit Switches	X										X										
			Load Cells	X										X										
			Lighting & Convenience Outlet Systems	X										X										
			Conduit System	X										X										
			Wire & Cable	X										X										
			Contact Conductors & Collectors	X										X										
			Dimensioned Outline Drawings, a-g		X									X										
			Test Reports						X					X										5 certified copies
			Cert of Factory Adjust Torque							X			X											

SUBMITTAL REGISTER

(ER 415-1-10)

CONTRACT NO:

TITLE AND LOCATION:
Center Hill 250 Ton Bridge Crane Rehab

CONTRACTOR:

SPECIFICATION SECTION:

TRANSM-ITTAL NO. A.	ITEM NO B.	SPECIFICATION PARAGRAPH NUMBER C.	DESCRIPTION OF ITEM SUBMITTED D.	TYPE OF SUBMITTAL: DATA E.	DRAWINGS F.	INSTRUCTIONS G.	SCHEDULES H.	STATMENTS I.	REPORTS J.	CERTIFICATES K.	SAMPLES L.	RECORDS M.	CLASSIFICATION: INFORMATION ONLY N.	GOVERNMENT APPROVED O.	REVIEWER (ORG CODE) P.	CONTRACTOR SCHEDULE DATES: SUBMIT Q.	APPROVAL NEEDED BY R.	MATERIAL NEEDED BY S.	CONTRACTOR ACTION: CODE T.	DATE U.	SUBMIT TO GOVERNMENT V.	GOVERNMENT ACTION: CODE W.	DATE X.	REMARKS Y.
			SECTION 01010																					
		1.3	Supervisor Qualifications	X									X			30 days								
			Organization Chart	X									X			30 days								
			Employee Procedure	X									X			30 days								
			List of Employees	X									X			14 days								
			Roadway Access	X									X			14 days								
			Working Hours	X										X		7 days								
			Site Work Schedule	X										X		30 days								
			Cntl of Hazardous Materials	X										X		14 days								
			Temp Electrial Powerlines	X										X		30 days								
			Transportation of Heavy Equipment	X										X		30 days								
			Indoor Storage Locations	X										X		30 days								
			Dust & Fume Control	X										X		30 days								
			Off-site Disposal Area	X										X		30 days								
			Access Equipment	X										X		30 days								
			Project Status	X									X											Required once a week
			Records of Parts Removed from Site					X					X											Available fro review at all time
			Schedule Change Request					X						X		48 hrs								
			Request for Drawings & Data					X					X			7 days								
			Notification of Damaged equipment					X					X											Immediately after Discovery

SUBMITTAL REGISTER

(ER 415-1-10)

CONTRACT NO:

TITLE AND LOCATION:
Center Hill 250 Ton Bridge Crane Rehab

CONTRACTOR:

SPECIFICATION SECTION:

TRANSM-ITTAL NO. A.	ITEM NO B.	SPECIFICA-TION PARA-GRAPH NUMBER C.	DESCRIPTION OF ITEM SUBMITTED D.	TYPE OF SUBMITTAL: DATA E.	DRAWINGS F.	INSTRUCTIONS G.	SCHEDULES H.	STATMENTS I.	REPORTS J.	CERTIFICATES K.	SAMPLES L.	RECORDS M.	CLASSI-FICATION: INFORMATION ONLY N.	GOVERNMENT APPROVED O.	REVIEWER (ORG CODE) P.	CONTRACTOR SCHEDULE DATES: SUBMIT Q.	APPROVAL NEEDED BY R.	MATERIAL NEEDED BY S.	CONTRACTOR ACTION: CODE T.	DATE U.	SUBMIT TO GOVERNMENT V.	GOVERNMENT ACTION: CODE W.	DATE X.	REMARKS Y.
			SECTION 01307																					
			Final As-Built drwings		X									X		90 days								
			CADD File Conversion		X									X		90 days								
			SECTION 01350																					
		1.3	Environmental Protection Plan	X										X		20 days								
			SECTION 01451																					
		1.3	Qualaity Control Plan	X										X		10 days								
			SECTION 01600																					
		1.3	Crane Inspect,Craftsmen & Crane Op.	X										X										
			Complete Rehab Procedure	X										X										
			Pre-Rehab Inspection Procedure	X										X										
			Post-Rehab Inspection Procedure	X										X										
			Acceptance Tests	X										X										
			Test Weight Handling Procedure	X										X										
			Detailed Dwgs of Test Weight Configuration	X										X										
			Pre-Rehab Inspection Report						X				X											
			Post-Rehab Inspection Report						X				X											
			Preliminary No-Load Test Results						X					X										

SUBMITTAL REGISTER

(ER 415-1-10)

CONTRACT NO:

TITLE AND LOCATION:
Center Hill 250 Bridge Crane Rehab

CONTRACTOR:

SPECIFICATION SECTION:

TRANSM-ITTAL NO. A.	ITEM NO B.	SPECIFICA-TION PARA-GRAPH NUMBER C.	DESCRIPTION OF ITEM SUBMITTED D.	TYPE OF SUBMITTAL: DATA E.	DRAWINGS F.	INSTRUCTIONS G.	SCHEDULES H.	STATMENTS I.	REPORTS J.	CERTIFICATES K.	SAMPLES L.	RECORDS M.	CLASSI-FICATION: INFORMATION ONLY N.	GOVERNMENT APPROVED O.	REVIEWER (ORG CODE) P.	CONTRACTOR SCHEDULE DATES: SUBMIT Q.	APPROVAL NEEDED BY R.	MATERIAL NEEDED BY S.	CONTRACTOR ACTION: CODE T.	DATE U.	SUBMIT TO GOVERNMENT V.	GOVERNMENT ACTION: CODE W.	DATE X.	REMARKS Y.
			SECTION 02080																					
		1.4	Mfg's Data	X										X										
			Sample Plan	X										X										
			Bulk Sampling Results	X										X										
			Asbestos Plan	X										X										
			Testing Lab & Air Monitoring Personnel	X										X										
			Industrial Hygienist	X										X										
			Training	X									X											
			Medical Exam	X									X											
			Respirator Fit Test	X									X											
			Permits & Notification	X									X											
			Waste Disposal Site	X									X											
			Insurance	X									X											
			Previous Citations	X									X											
			Work Site Entry	X									X											
			Daily Narrative Log	X									X											
			Pressure Differential Recordings	X									X											
			Air Monitoring Results	X									X											
			Waste Shipment Record	X									X											

SUBMITTAL REGISTER

(ER 415-1-10)

CONTRACT NO:

TITLE AND LOCATION:
Centre Hill 250 Ton Bridge Crane Rehab

CONTRACTOR:

SPECIFICATION SECTION:

TRANSM-ITTAL NO. A.	ITEM NO B.	SPECIFICATION PARAGRAPH NUMBER C.	DESCRIPTION OF ITEM SUBMITTED D.	TYPE OF SUBMITTAL: DATA E.	DRAWINGS F.	INSTRUCTIONS G.	SCHEDULES H.	STATMENTS I.	REPORTS J.	CERTIFICATES K.	SAMPLES L.	RECORDS M.	CLASSIFICATION: INFORMATION ONLY N.	GOVERNMENT APPROVED O.	REVIEWER (ORG CODE) P.	CONTRACTOR SCHEDULE DATES: SUBMIT Q.	APPROVAL NEEDED BY R.	MATERIAL NEEDED BY S.	CONTRACTOR ACTION: CODE T.	DATE U.	SUBMIT TO GOVERNMENT V.	GOVERNMENT ACTION: CODE W.	DATE X.	REMARKS Y.
			SECTION 02120																					
		1.3	On-site Hazardous Waste Management	X										X										Prior to start of work
			Off-Site Hazardous Waste Management	X										X										Prior to start of work
			Record Keeping						X					X										Necessary to file annual reports
			Spill Response						X				X											Notify immediately
			Exception Reports						X					X		35 days								
			Qualifications							X			X											
			Off-site Policy Compliance Certs							X			X											
			Certificates of Disposal							X			X			180 days								
			Shipping Documents							X				X		14 days								
			Notice of Non-Compliance & Violation									X	X											Notify Immediately
			SECTION 05101																					
		1.3	Shop Drawings		X									X										
			Schedule of Welding Procedures a-d				X							X										3 copies of complete schedules
			SECTION 05502																					
		1.3	Materials List	X										X										
			Detail Drawings		X									X										

SUBMITTAL REGISTER

(ER 415-1-10)

CONTRACT NO:

TITLE AND LOCATION:
Center Hill 250 Ton Bridge Crane Rehab

CONTRACTOR:

SPECIFICATION SECTION:

TRANSM-ITTAL NO. A.	ITEM NO B.	SPECIFICATION PARAGRAPH NUMBER C.	DESCRIPTION OF ITEM SUBMITTED D.	TYPE OF SUBMITTAL: DATA E.	DRAWINGS F.	INSTRUCTIONS G.	SCHEDULES H.	STATMENTS I.	REPORTS J.	CERTIFICATES K.	SAMPLES L.	RECORDS M.	CLASSIFICATION: INFORMATION ONLY N.	GOVERNMENT APPROVED O.	REVIEWER (ORG CODE) P.	CONTRACTOR SCHEDULE DATES: SUBMIT Q.	APPROVAL NEEDED BY R.	MATERIAL NEEDED BY S.	CONTRACTOR ACTION: CODE T.	DATE U.	SUBMIT TO GOVERNMENT V.	GOVERNMENT ACTION: CODE W.	DATE X.	REMARKS Y.
			Test Reports						X				X											
			Disposition									X	X											
			SECTION 09900																					
		1.3	Notification of Paint Batch Sampling					X					X			48 hrs								
			Qualifications & Experience					X						X		48 hrs								
			Airborne Sampling Results					X						X										
			Ventilation Assessment					X						X										
			Containment Plan					X						X										
			Water Quality Plan					X						X		24 hrs								
			Certified Test Reports of Paints & Thinners						X				X			30 days								
			Paints & Thinnners								X			X		30 days								
			SECTION 15000																					
		1.3	Descriptive Data	X										X										
			Computations	X										X										
			Drawings , a-b		X									X										
			SECTION 16050																					
		1.3	Motors a-c	X										X										

SUBMITTAL REGISTER

(ER 415-1-10)

CONTRACT NO:

TITLE AND LOCATION: Center Hill 250 Ton Bridge Crane Rehab

CONTRACTOR:

SPECIFICATION SECTION:

TRANSM-ITTAL NO. A.	ITEM NO B.	SPECIFICATION PARAGRAPH NUMBER C.	DESCRIPTION OF ITEM SUBMITTED D.	TYPE OF SUBMITTAL: DATA E.	DRAWINGS F.	INSTRUCTIONS G.	SCHEDULES H.	STATMENTS I.	REPORTS J.	CERTIFICATES K.	SAMPLES L.	RECORDS M.	CLASSIFICATION: INFORMATION ONLY N.	GOVERNMENT APPROVED O.	REVIEWER (ORG CODE) P.	CONTRACTOR SCHEDULE DATES: SUBMIT Q.	APPROVAL NEEDED BY R.	MATERIAL NEEDED BY S.	CONTRACTOR ACTION: CODE T.	DATE U.	SUBMIT TO GOVERNMENT V.	GOVERNMENT ACTION: CODE W.	DATE X.	REMARKS Y.
			Brakes, a-b	X										X										
			Control System Drives, Radio Equip,a-f	X										X										
			Limit Switches	X										X										
			Load Cells	X										X										
			Lighting & Convenience Outlet Systems	X										X										
			Conduit System	X										X										
			Wire & Cable	X										X										
			Contact Conductors & Collectors	X										X										
			Dimensioned Outline Drawings, a-g		X									X										
			Test Reports						X					X										5 certified copies
			Cert of Factory Adjust Torque							X			X											

SECTION 01350

ENVIRONMENTAL PROTECTION

TABLE OF CONTENTS

PART 1 GENERAL

1.1 GENERAL INFORMATION
1.2 APPLICABLE REGULATIONS
1.3 SUBMITTALS
1.4 NONCOMPLIANCE
1.5 SUBCONTRACTORS

PART 2 PRODUCTS

(NOT USED)

PART 3 EXECUTION

3.1 IMPLEMENTATION
3.2 NOT USED
3.3 DISPOSAL OF HAZARDOUS WASTE

SECTION 01350

ENVIRONMENTAL PROTECTION

PART 1 GENERAL

1.1 GENERAL INFORMATION

This section covers preventing environmental pollution and minimizing environmental degradation during and as a result of operations, required for the rehabilitation of the bridge crane. The requirements of SECTION 02080 shall be in conjunction with this section in addition to other sections which may contain environmental protection requirements.

1.2 APPLICABLE REGULATIONS

All environmental pollution shall be prevented, abated, and controlled and environmental degradation arising from construction activities shall be minimized by complying with all applicable Federal, State, and local laws and regulations, as well as specific requirements of this contract. Where conflicting or duplicate regulations apply, the most stringent requirement shall govern. Contractor shall comply with the following list of environmental regulations where applicable. This list is not inclusive of all environmental requirements, but represents the Federal regulations most likely to apply to work under this contract.

a. Clean Air Act - 40 CFR 61: Emission Standards for Hazardous Air Pollutants

b.. Solid Waste Disposal Act - 40 CFR 241: Land Disposal - 40 CFR 245: Resource Recovery

c. Resource Conservation and Recovery Act - 40 CFR 260-272: Hazardous Waste Management

d. Comprehensive Environmental Response , Compensation and Liability Act - 40 CFR 300-302: National Oil and Hazardous Substances Contingency Plan for hazardous substance spills and cleanup

e. Clean Water Act - 40 CFR 110-117 122 : Point source discharges into U.S. waters

f. Executive Order 12856 - Federal Compliance Order with the Emergency Planning and Community Right-to-Know Act and the Pollution Prevention Act

g. 49 CFR 100-177 Hazardous Materials Transportation Regulations

1.3 SUBMITTALS

Submittals required by this section of the Technical Specifications shall be for Government approval (GA) or for information only (FIO), and shall be submitted as stated below in accordance with SECTION 01330. The time of submittal shall be as indicated below.

SD-01 Data

Environmental Protection Plan; GA

Within 20 calendar days following notice to proceed (par. 3.1.1).

1.4 NONCOMPLIANCE

An order stopping all or part of the work may be issued for failure to comply with the provisions of this section until corrective action has been taken. No time lost due to such stop orders or stop orders issued by any appropriate Federal, State or local environmental protection agency shall be the subject of a claim for extension of time or for costs or damages unless it is later determined that the Contractor was in compliance.

1.5 SUBCONTRACTORS

Compliance with this section by subcontractors will be the responsibility of the Contractor.

PART 2 PRODUCTS

(NOT USED)

PART 3 EXECUTION

3.1 IMPLEMENTATION

3.1.1 Planning

The approved Environmental Protection Plan including proposals for implementing this section for environmental protection will be checked for completeness and compliance. If satisfactory it will be approved and one copy will be returned. If unsatisfactory it will be returned for resubmission. No physical work at the site shall be started until this plan has been approved or specific authorization is obtained to start a phase of the work. Preparation and submittal of supplemental plans may be required if additional environmental protection planning is found necessary for later phases of work. As a minimum the plan shall include the sections indicated below:

a. A contamination-prevention section listing all potentially hazardous petroleum products and hazardous and toxic materials used by the Contractor in the performance of his work or in his equipment at the powerhouse and corresponding provisions to be taken to prevent accidental or intentional introduction of such materials into any waterway. This section is to include plans for preventing polluted run-off from plant, equipment parking and maintenance areas from entering local water bodies.

b. A containment and cleanup section including the procedures, instructions, and reports to be used in the event of an unforeseen oil, hazardous material, or chemical spill. This section shall include as a minimum:

(1) The name of the individual who will be responsible for implementing and supervising the containment and cleanup.

(2) Material and equipment for cleanup work shall be tailored to the potential hazards involved.

(3) The names and locations of suppliers of containment materials and names and locations of additional fuel oil recovery, cleanup, restoration, and disposal equipment available in case of an unforeseen spill emergency.

(4) The methods and procedures to be used for expeditious cleanup.

(5) The name of the individual who will report any spills and who will follow up with complete documentation.

3.1.2 Coordination

Prior to the work, a meeting shall be held with the Government to develop mutual understandings relative to the administration of the environmental protection program.

3.1.3 Surveillance

During the work, all activities, including those of subcontractors, shall be supervised to assure compliance with the intent and details of the Plan. Training courses shall be conducted by the Contractor for himself and his subcontractors to assure that all personnel working at the site are familiar with the environmental protection provisions. All equipment and materials for environmental protection shall be inspected periodically to assure that they are in proper order and have not deteriorated.

3.1.4 Completion

Before this contract is completed, all restoration, cleanup and other work required to leave the site in an acceptable condition shall have been completed. Final payment will not be made until the environmental protection requirements have been met.

3.1.5 Protection of Water Resources

No water courses shall be polluted or have existing pollution contributed to with any petroleum products, oils, lubrications, or other toxic materials harmful to life. Chemical emulsifiers, dispersants, coagulants or other cleanup compounds shall not be used without prior written approval. Compliance with State water quality standards and conditions of any permits and clearances obtained for the work is the Contractor's responsibility.

3.2 NOT USED

3.3 DISPOSAL OF HAZARDOUS WASTE

The following shall apply to disposal of any hazardous waste:

a. The Contractor, where possible, will use or propose for use materials which may be considered environmentally friendly in that waste from such materials is not regulated as a hazardous waste or is not considered harmful to the environment.

b. Documentation for analysis, sampling, transportation, and disposal of all hazardous waste streams generated during this contract shall be in accordance with 40 CFR parts 260 through 272 and 49 CFR 100-177.

c. A copy of all hazardous waste determinations, sample results, and shipping manifests shall be furnished to the Government Quality Assurance Representative (GQAR) to verify compliance with Federal, State, and local regulations.

d. All hazardous wastes shall be removed from the Project for proper disposal within 90 days of waste generation. All hazardous waste shall be packaged, labeled, and marked in accordance with 40 CFR 172 and 173. All hazardous waste shall be stored in accordance with 40 CFR 264.

e. Certificates of Destruction or Disposal Certificates shall be submitted for all hazardous wastes within 14 days of actual disposal.

f. The Contractor's EPA identification number shall be used to dispose of all hazardous wastes generated by the Contractor and its subcontractors under this contract. This is construed to mean all hazardous wastes the Contractor or subcontractors generate from materials brought on the site for the purpose of performing work under the terms of the contract.

g. The Government's EPA identification number shall be used to dispose of all hazardous waste generated from Government-owned facilities on the project. This is construed to mean hazardous wastes generated from the repair, demolition, or removal of any existing materials and buildings from Government facilities and is not intended to include any wastes generated by the Contractor in the performance of its work.

h. It is the responsibility of the Contractor to prepare all hazardous waste manifests. The Contractor shall prepare manifests for Government signature when the Government's EPA identification number is used. The manifest shall be submitted 48 hours in advance of the waste being removed. The ECC will review and sign the manifest when the transporter arrives.

i. Hazardous or dangerous waste shall be recycled to the maximum extent possible. Placing hazardous or dangerous waste in a permitted hazardous waste landfill shall be the last resort. If such facility is necessary, the Contractor shall dispose of it in compliance with Federal, State and local requirements.

*****

SECTION 01451

CONTRACTOR QUALITY CONTROL

TABLE OF CONTENTS

PART 1 GENERAL

1.1 GENERAL INFORMATION
1.2 REFERENCES
1.3 SUBMITTALS

PART 2 PRODUCTS

2.1 QUALITY CONTROL PLAN

PART 3 EXECUTION

3.1 COORDINATION MEETING
3.2 QUALITY CONTROL ORGANIZATION
3.3 CQC CONTROLS
3.4 NOT APPLICABLE
3.5 COMPLETION INSPECTION
3.6 DOCUMENTATION
3.7 NOTIFICATION OF NONCOMPLIANCE
3.8 TECHNICAL SPECIFICATIONS SECTION REQUIREMENTS
3.9 PROGRESS AND WORK PHOTOGRAPHS
3.10 SAMPLE FORMS
3.11 DEFICIENCY TRACKING SYSTEM

SECTION 01451

CONTRACTOR QUALITY CONTROL

PART 1 GENERAL

1.1 GENERAL INFORMATION

A Contractor's Quality Control (CQC) system shall be established and maintained in compliance with SECTION 00700, Clause INSPECTION OF CONSTRUCTION. The CQC system shall include but not be limited to plans, procedures, and organization necessary to produce an end product which complies with the contract requirements. The CQC system shall cover both on-site and off-site construction operations, and shall be keyed to the proposed construction sequence.

1.2 REFERENCES

AMERICAN SOCIETY FOR TESTING AND MATERIALS (ASTM)

ASTM E329	(2002) Agencies Engaged in the Testing and/or Inspection of Materials Used in Construction

1.3 SUBMITTALS

Government approval is required for submittals with a "GA" designation; submittals having an "FIO" designation are for information only. The following shall be submitted in accordance with SECTION 01330 The time of submittal shall be in accordance with SECTION 01330, unless otherwise indicated below.

SD-01 Data

Quality Control Plan; GA

The CQC plan which is proposed to implement the requirements of paragraph 2.1.2, not later than 10 days after receipt of Notice to Proceed. Other submittals shall be as specified elsewhere in the technical sections of DIVISIONS 1 through 16. The CQC organization shall be responsible for certifying that all submittals are in compliance with the contract requirements.

PART 2 PRODUCTS

2.1 QUALITY CONTROL PLAN

2.1.1 General

The plan shall identify personnel, procedures, instructions, tests, records, and forms to be used. The Government will consider an interim plan for the first 30 days of operation. Construction will be permitted to begin only after acceptance of the CQC Plan or acceptance of an interim plan applicable to the particular feature of work to be started. Work outside of the features of work included in an accepted interim plan will not be permitted to begin until acceptance of a CQC Plan or another interim plan containing the additional features of work to be started.

2.1.2 The Contractor's Quality Control (CQC) Plan

The CQC plan shall include, as a minimum, the following to cover all construction operations, both on-site and off-site, including work by subcontractors, fabricators, suppliers and purchasing agents:

a. A description of the CQC organization, including a chart showing the lines of authority and acknowledgment that the CQC staff known as Contractor Quality Control Representatives (CQCR's) shall implement the three-phase control system for all aspects of the contract work. The staff shall include a CQC system manager who shall report to the project manager or someone higher in the Contractor's organization. Project manager shall mean the individual with responsibility for the overall management of the project including quality and production.

b. The name, qualifications (in résumé format), duties, responsibilities, and authorities of each person assigned a CQC function.

c. A copy of the letter to the CQC system manager signed by an authorized official of the firm which describes the responsibilities and delegates sufficient authorities to adequately perform the functions of the CQC system manager including authority to stop work which is not in compliance with the contract. The CQC system manager shall issue letters of direction to all other quality control representatives outlining duties, authorities and responsibilities. Copies of these letters shall be furnished to the Government.

d. Procedures for scheduling, reviewing, certifying, and managing submittals, including those of subcontractors, off-site fabricators, suppliers and purchasing agents.

e. Control, verification and acceptance testing procedures for each specific test to include the test name, specification paragraph requiring test, feature of work to be tested, test frequency, and person responsible for each test.

f. Procedures for tracking preparatory, initial, and follow-up control phases and control, verification, and acceptance tests including documentation.

g. Procedures for tracking construction deficiencies from identification through acceptable corrective action. These procedures will establish verification that identified deficiencies have been corrected.

h. Reporting procedures, including proposed reporting formats.

i. A list of the definable features of work. A definable feature of work is a task which is separate and distinct from other tasks and has separate control requirements. It could be identified by different trades or disciplines, or it could be work by the same trade in a different environment. Although each section of the specifications may generally be considered as a definable feature of work, there are frequently more than one definable feature under a particular section. This list will be agreed upon during the coordination meeting.

2.1.3 Acceptance of Plan

Acceptance of the CQC plan is required prior to the start of construction. Acceptance is conditional and will be predicated on satisfactory performance during the construction. The Government reserves the right to require the Contractor to make changes in the CQC plan and operations including removal of personnel, as necessary, to obtain conformance with contract requirements.

2.1.4 Notification of Changes

After acceptance of the CQC plan, any proposed changes shall be submitted for acceptance a minimum of 7 calendar days prior to implementing any proposed change.

PART 3 EXECUTION

3.1 COORDINATION MEETING

After the pre-construction conference and before the start of construction, the Government and the Contractor shall meet to discuss and develop a mutual understanding of the CQC system in detail, and the interrelationship of Contractor's management and control with the Government's quality assurance. Minutes of the meeting which will be prepared by the Government and shall be signed by both the Contractor and the Government, shall become a part of the contract file. There may also be occasions when subsequent conferences will be called by either party to reconfirm mutual understandings and/or address deficiencies in the CQC system or procedures which may require corrective action by the Contractor.

3.2 QUALITY CONTROL ORGANIZATION

An individual shall be identified within the Contractor's organization at the site of the work who shall be responsible for the overall management of CQC known as the CQC manager and shall have the authority to act in all CQC matters for the contractor. An alternate for the CQC System Manager will be identified in the plan to serve in the event of the system manager's absence. Period of absence may not exceed 3 weeks at any one time, and not more than 40 workdays during a calendar year. The requirements for the alternate will be the same as for the designated CQC manager. In addition to the above experience and education requirements the CQC System manager shall have completed the course entitled “Construction Quality Management for Contractors.” This course is periodically offered by the Government.

3.3 CQC CONTROLS

CQC is the means by which the Contractor ensures that the construction, to include that of subcontractors and suppliers, complies with the requirements of the contract. The controls shall be adequate to cover all construction operations, including both on-site and off-site fabrication, and will be keyed to the proposed construction sequence. The controls shall include at least three phases of control to be conducted by the CQC system manager for all definable features of work, as follows:

3.3.1 Preparatory Phase

This phase shall be performed prior to beginning work on each definable feature of work and shall include:

a. A review of each paragraph of applicable specifications.

b. A review of the contract plans.

c. A check to assure that all materials and/or equipment have been tested, submitted, and approved.

d. A check to assure that required control inspection and testing are provided.

e. Examination of the work area to assure that all required previous work has been completed and is in compliance with the contract.

f. A physical examination of required materials, equipment, and sample work to assure that they are on hand, conform to approved shop drawing or submitted data, and are stored as specified.

g. A review of the appropriate activity hazard analysis to assure that safety requirements are met.

h. Discussion of procedures for the work features including but not limited to tolerances and workmanship standards for that phase of work.

i. A check to ensure that the portion of the plan for the work to be performed has been submitted and accepted.

j. The Government shall be notified at least 48 hours in advance of beginning any of the required action of the preparatory phase. This phase shall include a meeting conducted by the CQC system manager and attended by the superintendent, other CQC personnel (as applicable), and the individual responsible for the definable feature. The results of the preparatory phase actions shall be documented by separate minutes prepared by the CQC system manager and attached to the daily CQC report. The applicable workers shall be informed as to the acceptable level of workmanship required in order to meet contract specifications prior to the start of the actual work.

3.3.2 Initial Phase

This phase shall be accomplished at the beginning of a definable feature of work. The following shall be accomplished:

a. A check of preparatory phase work to ensure that it is in compliance with contract requirements. Review minutes of the preparatory meeting.

b. Verification of full contract compliance. Verify required control inspection and testing.

c. Establish level of workmanship and verify that it meets minimum acceptable workmanship standards. Compare with sample panels is appropriate.

d. Resolve all differences.

e. Check safety to include compliance with and upgrading of the safety plan and activity hazard analysis. Review the activity analysis with each worker.

f. The Government shall be notified at least 48 hours in advance of beginning the initial phase. Separate minutes of this phase shall be prepared by the CQC system manager and attached to the daily CQC report. Exact location of initial phase shall be indicated for future reference and comparison with follow-up phases.

g. The initial phase should be repeated for each new crew to work on-site, or any time specified quality standards are not being met.

3.3.3 Follow up Phase

Daily checks shall be performed on the ongoing work to assure continuing compliance with contract requirements, including control testing, until completion of the particular feature of work. The checks shall be made a matter of record in the CQC documentation. Final follow-up checks shall be conducted and all deficiencies corrected prior to the start of additional features of work which may be affected by the deficient work. The Contractor shall not build upon or conceal non-conforming work.

3.3.4 Additional Preparatory and Initial Phases

Additional preparatory and initial phases may be conducted on the same definable features of work as determined by the Government if the quality of on-going work is unacceptable; or if there are changes in the applicable CQC staff or in the on-site production supervision or work crew; or if work on a definable feature is resumed after a substantial period of inactivity; or if other problems develop.

3.4 NOT APPLICABLE

3.5 COMPLETION INSPECTION

At the completion of all work or any increment thereof established by a completion time stated elsewhere in the specifications, the CQC manager shall conduct an inspection of the work and develop a "punch list" of items which are incomplete and/or do not conform to the approved plans and specifications. Such a list shall be included in the CQC documentation, as required by paragraph 3.6, and shall include the estimated date by which the deficiencies will be corrected. The CQC system manager or staff shall make a second inspection jointly with the GQAR to ascertain that all deficiencies have been corrected and submit a record of the inspection to the GQAR. These inspections and any deficiency corrections required by this paragraph shall be accomplished within the time stated for completion of the entire work or any particular increment thereof, if the project is divided into increments by separate completion dates.

3.6 DOCUMENTATION

Current records of CQC operations, activities, and tests performed shall be maintained including the work of subcontractors and suppliers. These records shall be on an approved form and shall include factual evidence that required quality control activities and/or tests have been performed including but not limited to the following:

a. Contractor/subcontractor and their area of responsibility.

b. Operating plant/equipment with hours worked, idle, or down for repair.

c. Work performed today, giving location, description, and by whom. When Network Analysis (NAS) is used, identify each phase of work performed each day by NAS activity number.

d. Test and/or control activities performed with results and references to specifications/plan requirements. The control phase should be identified (Preparatory, Initial, Follow-up). List deficiencies noted along with corrective action.

e. Material received with statement as to its acceptability and storage.

f. Identify submittals reviewed, with contract reference, by whom, and action taken.

g. Off-site surveillance activities, including actions taken.

h. Job safety and environmental protection evaluations stating what was checked, results, and instructions or corrective actions.

i. List instructions given/received and conflicts in plans and/or specifications.

j. Contractor's verification statement.

k. These records shall indicate a description of trades working on the project; the number of personnel working; weather conditions encountered; and any delays encountered. These records shall cover both conforming and deficient features and shall include a statement that equipment and materials incorporated in the work and workmanship comply with the contract. The original and one copy of these records in report form shall be furnished to the Government daily within 24 hours after the date(s) covered by the report, except that reports need not be submitted for days on which no work is performed. All calendar days shall be accounted for throughout the life of the contract. Reports shall be signed and dated by the CQC system manager. The report from the CQC system manager shall include copies of test reports and copies of reports prepared by all subordinate quality control personnel.

3.7 NOTIFICATION OF NONCOMPLIANCE

The Contracting Officer will notify the Contractor of any detected noncompliance with the foregoing requirements. The Contractor shall take immediate corrective action after receipt of such notice. Such notice, when delivered to the Contractor at the worksite, shall be deemed sufficient for the purpose of notification. If the Contractor fails or refuses to comply promptly, the Contracting Officer may issue an order stopping all or part of the work until satisfactory corrective action has been taken. No part of the time lost due to such stop orders shall be made the subject of claim for extension of time or for excess costs or damages by the Contractor.

3.8 TECHNICAL SPECIFICATIONS SECTION REQUIREMENTS

Inspections, tests, assurances, reports, etc., called for in the technical sections of DIVISIONS 1 through 16 are in conjunction with this section. The CQC manager or a CQCR staff shall conduct the inspection of all aspects of the items mentioned in the Technical Specifications for compliance and conduct all required inspections and tests, etc. Inspections and tests shall be recorded in the daily CQC report required in paragraph 3.6.

3.9 PROGRESS AND WORK PHOTOGRAPHS

3.9.1 General

The Contractor shall, during the progress of the project, furnish the Government progress photographs to depict progress and work conditions of the site construction. The work photographs shall be taken at project initiation, at monthly intervals thereafter, and after completion of work.

3.9.2 Photographs

Photographs depicting progress shall be delivered to the Government along with each request for payment. Photographs depicting specific work, as specified above, shall be submitted with the monthly request for payment in the month which the work took place. The progress photographs shall be taken from not less than two positions for each work area. They shall show, inasmuch as practical, work accomplished since the previous photographs. Project initiation photographs shall be taken from the same location and angle as the project completion photographs. The photographs shall be high resolution digital images saved as JPEG (Joint Photographic Experts Group) files, or other acceptable compressed format. The resolution shall be no less than 1024 x 768 pixels. Each photograph shall be identified by the date and number of exposure, plus a brief description of the work photographed. The photographs shall be furnished to the Government in a 3-1/2” HD floppy diskette, or other acceptable media, by the time stipulated above. No separate payment shall be made for these services and all costs in connection thereto shall be considered incidental to costs of the representative work area.

3.9.3 Delinquent Photographs

For each month the Contractor fails to submit progress and work photographs, the Contracting Officer may retain $200.00 or 10 percent of the progress payment, whichever is greater, in accordance with Contract Clause PAYMENTS UNDER FIXED-PRICE CONSTRUCTION CONTRACTS. Also, in accordance with Clause INSPECTION OF CONSTRUCTION, the Contracting Officer may, by contract or otherwise, have the progress and work photographs taken and modify the contract amount to reflect the charges for these photographs.

3.10 SAMPLE FORMS

Sample forms, for Contractor’s QC Report and Deficiency List, are enclosed at the end of this section.

3.11 DEFICIENCY TRACKING SYSTEM

The Contractor shall maintain a cumulative list of deficiencies identified for the duration of the project. Deficiencies to be listed include those identified by the Contractor's Quality Control observations, test failures, Government oral observations and Notifications of Noncompliance. As a minimum, the list shall include the information contained in the Deficiency List attached at the end of this section. A current copy of the list shall be maintained at the project site at all times and shall be made available for review by Government personnel. Copies of updated listings shall be submitted to the CO at least every 30 days. Payment will be withheld for deficient work until it has been corrected.

*****

CONTRACTOR'S QUALITY CONTROL REPORT (QCR) (ER 1180-1-6)	DATE:	REPORT NO.
CONTRACT NUMBER AND NAME OF CONTRACTOR:	DESCRIPTION AND LOCATION OF THE WORK:	

WEATHER CLASSIFICATION:	CLASSIFICATION:
CLASS A No interruptions of any kind from weather conditions occurring on this or previous shifts.	CLASS _____
CLASS B Weather occurred during this shift that caused a complete stoppage of all work.	TEMPERATURE:
CLASS C Weather occurred during this shift that caused a partial stoppage of work.	
CLASS D Weather overhead excellent or suitable during shift. Work completelly stopped due to previous adverse weather.	MAX _____ MIN _____
CLASS E Weather overhead excellent or suitable during shift but work partially stopped due to previous adverse weather.	PRECIPITATION:
OTHER Explain.	INCHES _____

CONTRACTOR/SUBCONTRACTORS AND AREA OF RESPONSIBILITY FOR WORK PERFORMED TODAY:
(Attach listof items of equipment either idle or working as appropriate.)

a. _____
b. _____
c. _____
d. _____
e. _____
f. _____
g. _____

1. WORK PERFORMED TODAY:(Indicate location and description of work performed. Refer to work performed by prime and/or subcontractors by letter in Table above.)

2. TYPE AND RESULTS OF INSPECTION:(Indicate wether: P-Preparatory, I-Initial, or F-Follow-up and include satisfactory work completed or deficiencies with action to be taken.)

3. TESTS REQUIRED BY PLANS AND/OR SPECIFICATIONS PERFORMED AND RESULTS OF TESTS:

4. VERBAL INSTRUCTIONS RECEIVED:(List any instruction given by the Government personnel on construction deficiencies, retesting required, etc., with action to be taken.)

5. REMARKS: Cover any conflicts in plans, specifications or instructions: acceptability of incoming materials; offsite surveillance activities; progress of work, delays, causes and extent thereof; days of no work with reasons for same.)

6. SAFETY: Include any infractions of approved safety plan, safety manual or instruction from Government personnel. Specify corrective action taken.)

SAFETY INSPECTOR

7. CONTRACTOR'S CERTIFICATION: I certify that the above report is complete and correct and that all material and equipment used, work performed and tests conducted during this reporting period were in strict compliance with the contract plans and specifications except as noted above.

CONTRACTOR QUALITY CONTROL SYSTEM MANAGER

DEFICIENCY LIST

CONTRACT NO.: _____ PROJECT: _____

DEFIC. NO.	DESCRIPTION	DEFICIENCY		CORRECTION		COMMENTS
		DATE OBSERVED	CQC REPORT NO.	DATE CORRECTED	CQC REPORT NO.	

SECTION 01525

SAFETY AND OCCUPATIONAL HEALTH REQUIREMENTS

TABLE OF CONTENTS

PART 1 GENERAL

1.1 REFERENCES
1.2 SUBMITTALS
1.3 DEFINITIONS
1.4 REGULATORY REQUIREMENTS
1.5 DRUG PREVENTION PROGRAM
1.6 SITE QUALIFICATIONS, DUTIES AND MEETINGS
1.7 TRAINING
1.8 ACCIDENT PREVENTION PLAN (APP)
1.9 ACTIVITY HAZARD ANALYSIS (AHA)
1.10 DISPLAY OF SAFETY INFORMATION
1.11 SITE SAFETY REFERENCE MATERIALS
1.12 EMERGENCY MEDICAL TREATMENT
1.13 REPORTS

PART 2 PRODUCTS

2.1 CONFINED SPACE SIGNAGE
2.2 FALL PROTECTION ANCHORAGE

PART 3 EXECUTION

3.1 CONSTRUCTION AND/OR OTHER WORK
3.2 PRE-OUTAGE COORDINATION MEETING
3.3 FALL HAZARD PROTECTION AND PREVENTION PROGRAM
3.4 SCAFFOLDING
3.5 EQUIPMENT
3.6 EXCAVATIONS
3.7 ELECTRICAL
3.8 WORK IN CONFINED SPACES
3.9 HOUSEKEEPING

End of Section Table of Contents

SECTION 01525

SAFETY AND OCCUPATIONAL HEALTH REQUIREMENTS

PART 1 GENERAL

1.1 REFERENCES

The publications listed below form a part of this specification to the extent referenced. The publications are referred to within the text by the basic designation only.

AMERICAN NATIONAL STANDARDS INSTITUTE (ANSI)

ANSI Z359.1	(1999) Safety Requirements for Personal Fall Arrest Systems, Subsystems and Components

ASME INTERNATIONAL (ASME)

ASME B30.3	(1996) Construction Tower Cranes
ASME B30.5	(2000) Mobile and Locomotive Cranes
ASME B30.8	(2000) Floating Cranes and Floating Derricks
ASME B30.22	(2000) Articulating Boom Cranes

U.S. NATIONAL ARCHIVES AND RECORDS ADMINISTRATION (NARA)

29 CFR 1910	Occupational Safety and Health Standards for General Industry
29 CFR 1910.94	Ventilation
29 CFR 1910.120	Hazardous Waste Operations and Emergency Response
29 CFR 1910.146	Permit-required Confined Spaces
29 CFR 1915	Confined and Enclosed Spaces and Other Dangerous Atmospheres in Shipyard Employment
29 CFR 1919	Gear Certification
29 CFR 1926	Safety and Health Regulations for Construction
29 CFR 1926.62	Lead in Construction
29 CFR 1926.65	Hazardous Waste Operations and Emergency Response
29 CFR 1926.450	Scaffolds
29 CFR 1926.500	Fall Protection
29 CFR 1926.1101	Asbestos

U. S. ARMY CORPS OF ENGINEERS (USACE)

EM 385-1-1	(2003) Safety and Health Requirements Manual

NATIONAL FIRE PROTECTION ASSOCIATION (NFPA)

NFPA 10	(1998) Portable Fire Extinguishers
NFPA 51B	(2003) Fire Prevention During Welding, Cutting, and Other Hot Work
NFPA 70	(2002) National Electrical Code
NFPA 241	(2000) Safeguarding Construction, Alteration, and Demolition Operations

1.2 SUBMITTALS

Government approval is required for submittals with a "G" designation; submittals not having a "G" designation are for information only or as otherwise designated. When used, a designation following the "G" designation identifies the office that will review the submittal for the Government. The following shall be submitted in accordance with Section 01330 SUBMITTAL PROCEDURES:

SD-01 Preconstruction Submittals

Accident Prevention Plan (APP); G

Activity Hazard Analysis (AHA); G

Crane Critical Lift Plan; G

Crane Work Plan; G

Proof of qualification for Crane Operators; G

SD-06 Test Reports

Reports

Submit reports as their incidence occurs, in accordance with the requirements of the paragraph entitled, "Reports."

Accident Reports

Monthly Exposure Reports

Regulatory Citations and Violations

Crane Reports

SD-07 Certificates

Confined Space Entry Permit

Certificate of Compliance (Crane)

Submit one copy of each permit attached to each Daily Quality Control Report.

1.3 DEFINITIONS

a. Competent Person for Fall Protection. A person who is capable of identifying hazardous or dangerous conditions in the personal fall arrest system or any component thereof, as well as their application and use with related equipment, and has the authority to take prompt corrective measures to eliminate the hazards of falling.

b. High Visibility Accident. Any mishap which may generate publicity and/or high visibility.

c. Low-slope roof. A roof having a slope less than or equal to 4 in 12 (vertical to horizontal).

d. Medical Treatment. Treatment administered by a physician or by registered professional personnel under the standing orders of a physician. Medical treatment does not include first aid treatment even through provided by a physician or registered personnel.

e. Multi-Employer Work Site (MEWS). A multi-employer work site, as defined by OSHA, is one in which many employers occupy the same site. The Government considers the Prime Contractor to be the "controlling authority" for all work site safety and health of the subcontractors.

f. Operating Envelope. The area surrounding any crane. Inside this "envelope" is the crane, the operator, riggers, rigging gear between the hook and the load, the load and the crane's supporting structure (ground, rail, etc.).

g. Qualified Person for Fall Protection. A person with a recognized degree or professional certificate, extensive knowledge, training and experience in the field of fall protection who is capable of performing design, analysis, and evaluation of fall protection systems and equipment.

h. Recordable Injuries or Illnesses. Any work-related injury or illness that results in:

(1) Death, regardless of the time between the injury and death, or the length of the illness;

(2) Days away from work;

(3) Restricted work;

(4) Transfer to another job;

(5) Medical treatment beyond first aid;

(6) Loss of consciousness; or

(7) A significant injury or illness diagnosed by a physician or other licensed health care professional, even if it did not result in (1) through (6) above.

i. Site Safety and Health Officer (SSHO). The superintendent or other qualified or competent person who is responsible for the on-site safety and health required for the project. The Contractor quality control (QC) person can be the SSHO on this project.

j. Steep roof. A roof having a slope greater than 4 in 12 (vertical to horizontal).

k. "USACE" property and equipment specified in USACE EM 385-1-1 should be interpreted as Government property and equipment.

l. Weight Handling Equipment (WHE) Accident. A WHE accident occurs when any one or more of the six elements in the operating envelope fails to perform correctly during operation, including operation during maintenance or testing resulting in personnel injury or death; material or equipment damage; dropped load; derailment; two-blocking; overload; and collision, including unplanned contact between the load, crane, and/or other objects. A dropped load, derailment, two-blocking, overload and collision are considered accidents even though no material damage or injury occurs. A component failure (e.g., motor burnout, gear tooth failure, bearing failure) is not considered an accident solely due to material or equipment damage unless the component failure results in damage to other components (e.g., dropped boom, dropped load, roll over, etc.).

1.4 REGULATORY REQUIREMENTS

In addition to the detailed requirements included in the provisions of this contract, work performed shall comply with USACE EM 385-1-1, and the following federal, state, and local laws, ordinances, criteria, rules and regulations. Submit matters of interpretation of standards to the appropriate administrative agency for resolution before starting work. Where the requirements of this specification, applicable laws, criteria, ordinances, regulations, and referenced documents vary, the most stringent requirements shall apply.

1.5 DRUG PREVENTION PROGRAM

Conduct a proactive drug and alcohol use prevention program for all workers, prime and subcontractor, on the site. Ensure that no employee uses illegal drugs or consumes alcohol during work hours. Ensure there are no employees under the influence of drugs or alcohol during work hours. After accidents, collect blood, urine, or saliva specimens and test the injured and involved employees for the influence of drugs and alcohol. A copy of the test shall be made available to the Contracting Officer upon request.

1.6 SITE QUALIFICATIONS, DUTIES AND MEETINGS

1.6.1 Personnel Qualifications

1.6.1.1 Site Safety and Health Officer (SSHO)

Site Safety and Health Officer (SSHO) shall be provided at the work site at all times to perform safety and occupational health management, surveillance, inspections, and safety enforcement for the Contractor. The SSHO shall meet the following requirements:

A minimum of 5 years safety work on similar projects.
30-hour OSHA construction safety class or equivalent within the last 5 years.
An average of at least 24 hours of formal safety training each year for the past 5 years.

1.6.1.2 Competent Person for Confined Space Entry

Provide a competent person meeting the requirements of EM 385-1-1 who is assigned in writing by the Designated Authority to assess confined spaces and who possesses demonstrated knowledge, skill and ability to:

a. Identify the structure, location, and designation of confined and permit-required confined spaces where work is done;

b. Calibrate and use testing equipment including but not limited to, oxygen indicators, combustible gas indicators, carbon monoxide indicators, and carbon dioxide indicators, and to interpret accurately the test results of that equipment;

c. Perform all required tests and inspections specified in 29 CFR 1910.146 and 29 CFR 1915 Subpart B;

d. Assess hazardous conditions including atmospheric hazards in confined space and adjacent spaces and specify the necessary protection and precautions to be taken;

e. Determine ventilation requirements for confined space entries and operations;

f. Assess hazards associated with hot work in confined and adjacent space and determine fire watch requirements; and,

g. Maintain records required.

1.6.1.3 Competent Person for the Health Hazard Control and Respiratory Protection Program

Provide a competent person meeting the requirements of EM 385-1-1 who is:

a. Capable by education, specialized training and/or experience of anticipating, recognizing, and evaluating employee exposure to hazardous chemical, physical and biological agents in accordance with USACE EM 385-1-1, Section 6.

b. Capable of specifying necessary controls and protective actions to ensure worker health.

1.6.1.4 Crane Operators

Crane operators shall meet the requirements in USACE EM 385-1-1, Section 16 and Appendix G. In addition, for mobile cranes with Original Equipment Manufacturer (OEM) rated capacitates of 50,000 pounds or greater, crane operators shall be designated as qualified by a source that qualifies crane operators (i.e., union, a government agency, or and organization that tests and qualifies crane operators). Proof of current qualification shall be provided.

1.6.2 Personnel Duties

1.6.2.1 Site Safety and Health Officer (SSHO)/Superintendent

a. Conduct daily safety and health inspections and maintain a written log which includes area/operation inspected, date of inspection, identified hazards, recommended corrective actions, estimated and actual dates of corrections. Safety inspection logs shall be attached to the Contractors' daily quality control report.

b. Conduct mishap investigations and complete required reports. Maintain the OSHA Form 300 and Daily Production reports for prime and sub-contractors.

c. Maintain applicable safety reference material on the job site.

d. Attend the pre-construction conference, pre-work meetings including preparatory inspection meeting, and periodic in-progress meetings.

e. Implement and enforce accepted APPS and AHAs.

f. Maintain a safety and health deficiency tracking system that monitors outstanding deficiencies until resolution. A list of unresolved safety and health deficiencies shall be posted on the safety bulletin board.

g. Ensure sub-contractor compliance with safety and health requirements.

Failure to perform the above duties will result in dismissal of the superintendent and/or SSHO, and a project work stoppage. The project work stoppage will remain in effect pending approval of a suitable replacement.

1.6.3 Meetings

1.6.3.1 Preconstruction Conference

a. The Contractor will be informed, in writing, of the date of the preconstruction conference. The purpose of the preconstruction conference is for the Contractor and the Contracting Officer's representatives to become acquainted and explain the functions and operating procedures of their respective organizations and to reach mutual understanding relative to the administration of the overall project's Accident Prevention Plan (APP) before the initiation of work.

b. Contractor representatives who have a responsibility or significant role in accident prevention on the project shall attend the preconstruction conference. This includes the project superintendent, site safety and health officer, quality control supervisor, or any other assigned safety and health professionals who participated in the development of the APP (including the Activity Hazard Analyses (AHAs) and special plans, program and procedures associated with it).

c. The Contractor shall discuss the details of the submitted APP to include incorporated plans, programs, procedures and a listing of anticipated AHAs that will be developed and implemented during the performance of the contract. This list of proposed AHAs will be reviewed at the conference and an agreement will be reached between the Contractor and the Contracting Officer's representative as to which phases will require an analysis. In addition, a schedule for the preparation, submittal, review, and acceptance of AHAs shall be established to preclude project delays.

d. Deficiencies in the submitted APP will be brought to the attention of the Contractor at the preconstruction conference, and the Contractor shall revise the plan to correct deficiencies and re-submit it for acceptance. Work shall not begin until there is an accepted APP.

e. The functions of a Preconstruction conference may take place at the Post-Award Kickoff meeting for Design Build Contracts.

1.6.3.2 Weekly Safety Meetings

Conduct weekly safety meetings at the project site for all employees. The Contracting Officer will be informed of the meeting in advance and be allowed attendance. Minutes showing contract title, signatures of attendees and a list of topics discussed shall be attached to the Contractors' daily quality control report.

1.6.3.3 Work Phase Meetings

The appropriate AHA shall be reviewed and attendance documented by the Contractor at the preparatory, initial, and follow-up phases of quality control inspection. The analysis should be used during daily inspections to ensure the implementation and effectiveness of safety and health controls.

1.7 TRAINING

1.7.1 New Employee Indoctrination

New employees (prime and sub-contractor) will be informed of specific site hazards before they begin work. Documentation of this orientation shall be kept on file at the project site.

1.7.2 Periodic Training

Provide Safety and Health Training in accordance with USACE EM 385-1-1 and the accepted APP. Ensure all required training has been accomplished for all onsite employees.

1.7.3 Training on Activity Hazard Analysis (AHA)

Prior to beginning a new phase, training will be provided to all affected employees to include a review of the AHA to be implemented.

1.8 ACCIDENT PREVENTION PLAN (APP)

The Contractor shall use a qualified person to prepare the written site-specific APP. Prepare the APP in accordance with the format and requirements of USACE EM 385-1-1 and as supplemented herein. Cover all paragraph and subparagraph elements in USACE EM 385-1-1, Appendix A, "Minimum Basic Outline for Preparation of Accident Prevention Plan". Where a paragraph or subparagraph element is not applicable to the work to be performed indicate "Not Applicable" next to the heading. Specific requirements for some of the APP elements are described below at paragraph 1.8.1. The APP shall be job-specific and shall address any unusual or unique aspects of the project or activity for which it is written. The APP shall interface with the Contractor's overall safety and health program. Any portions of the Contractor's overall safety and health program referenced in the APP shall be included in the applicable APP element and made site-specific. The Government considers the Prime Contractor to be the "controlling authority" for all work site safety and health of the subcontractors. Contractors are responsible for informing their subcontractors of the safety provisions under the terms of the contract and the penalties for noncompliance, coordinating the work to prevent one craft from interfering with or creating hazardous working conditions for other crafts, and inspecting subcontractor operations to ensure that accident prevention responsibilities are being carried out. The APP shall be signed by the person and firm (senior person) preparing the APP, the Contractor, the on-site superintendent, the designated site safety and health officer.

Submit the APP to the Contracting Officer 15 calendar days prior to the date of the preconstruction conference for acceptance. Work cannot proceed without an accepted APP. The Contracting Officer reviews and comments on the Contractor's submitted APP and accepts it when it meets the requirements of the contract provisions.

Once accepted by the Contracting Officer, the APP and attachments will be enforced as part of the contract. Disregarding the provisions of this contract or the accepted APP will be cause for stopping of work, at the discretion of the Contracting Officer, until the matter has been rectified.

Once work begins, changes to the accepted APP shall be made with the knowledge and concurrence of the Contracting Officer, project superintendent, SSHO and quality control manager. Should any unforeseen hazard become evident during the performance of work, the project superintendent shall inform the Contracting Officer, both verbally and in writing, for resolution as soon as possible. In the interim, all necessary action shall be taken by the Contractor to restore and maintain safe working conditions in order to safeguard onsite personnel, visitors, the public, and the environment.

Copies of the accepted plan will be maintained at the Contracting Officer's office and at the job site. The APP shall be continuously reviewed and amended, as necessary, throughout the life of the contract. Unusual or high-hazard activities not identified in the original APP shall be incorporated in the plan as they are discovered.

1.8.1 EM 385-1-1 Contents

In addition to the requirements outlines in Appendix A of USACE EM 385-1-1, the following is required:

a. Names and qualifications (resumes including education, training, experience and certifications) of all site safety and health personnel designated to perform work on this project to include the designated site safety and health officer and other competent and qualified personnel to be used. The duties of each position shall be specified.

b. Qualifications of competent and of qualified persons. As a minimum, competent persons shall be designated and qualifications submitted for each of the following major areas: excavation; scaffolding; fall protection; hazardous energy; confined space; health hazard recognition, evaluation and control of chemical, physical and biological agents; personal protective equipment and clothing to include selection, use and maintenance.

c. Confined Space Entry Plan. Develop a confined space entry plan in accordance with USACE EM 385-1-1, applicable OSHA standards 29 CFR 1910, 29 CFR 1915, and 29 CFR 1926, and any other federal, state and local regulatory requirements identified in this contract. Identify the qualified person's name and qualifications, training, and experience. Delineate the qualified person's authority to direct work stoppage in the event of hazardous conditions. Include procedure for rescue by contractor personnel and the coordination with emergency responders. (If there is no confined space work, include a statement that no confined space work exists and none will be created.)

d. Health Hazard Control Program. The Contractor shall designate a competent and qualified person to establish and oversee a Health Hazard Control Program in accordance with USACE EM 385-1-1, Section 6. The program shall ensure that employees, on-site Government representatives, and others, are not adversely exposed to chemical, physical and biological agents and that necessary controls and protective actions are instituted to ensure health.

e. Crane Critical Lift Plan. Prepare and sign weight handling critical lift plans for lifts over 75 percent of the capacity of the crane or hoist (or lifts over 50 percent of the capacity of a barge mounted mobile crane's hoists) at any radius of lift; lifts involving more than one crane or hoist; lifts of personnel; and lifts involving non-routine rigging or operation, sensitive equipment, or unusual safety risks. The plan shall be submitted 15 calendar days prior to on-site work and include the requirements of USACE EM 385-1-1, paragraph 16.c.18. and the following:

(1) For lifts of personnel, the plan shall demonstrate compliance with the requirements of 29 CFR 1926.550(g).

(2) For barge mounted mobile cranes, barge stability calculations identifying barge list and trim based on anticipated loading; and load charts based on calculated list and trim. The amount of list and trim shall be within the crane manufacturer's requirements.

f. Alcohol and Drug Abuse Plan

(1) Describe plan for random checks and testing with pre-employment screening in accordance with the DFAR Clause subpart 252.223-7004, "Drug Free Work Force."

(2) Description of the on-site prevention program

g. Fall Protection and Prevention (FP&P) Plan. The plan shall be site specific and address all fall hazards in the work place and during different phases of construction. It shall address how to protect and prevent workers from falling to lower levels when they are exposed to fall hazards above 1.8 m (6 feet). A qualified person for fall protection shall prepare and sign the plan. The plan shall include fall protection and prevention systems, equipment and methods employed for every phase of work, responsibilities, assisted rescue, self-rescue and evacuation procedures, training requirements, and monitoring methods. Fall Protection and Prevention Plan shall be for lengthy projects, reflecting any changes during the course of construction due to changes in personnel, equipment, systems or work habits. The accepted Fall Protection and Prevention Plan shall be kept and maintained at the job site for the duration of the project. The Fall Protection and Prevention Plan shall be included in the Accident Prevention Plan (APP).

h. Training Records and Requirements. List of mandatory training and certifications which are applicable to this project (e.g. explosive actuated tools, confined space entry, fall protection, crane operation, vehicle operator, forklift operators, personal protective equipment); list of requirements for periodic retraining/certification; outline requirements for supervisory and employee safety meetings.

i. Site Safety and Health Plan. The safety and health aspects prepared in accordance with the specifications.

j. Excavation Plan. The safety and health aspects prepared in accordance with this specification.

k. Crane Work Plan. The contractor shall provide a crane work plan to the Contracting Officer for acceptance. The crane work plan shall include the specific model of each crane and a drawing identifying their locations (exact), the dimensions, wheel sizes, number of wheels, wheel spacing, tire pressure(s), number of axles, axle spacing, minimum wheel load to be exerted during operations and maximum outrigger load to be exerted during operations. The Contractor shall allow at least 10 working days for acceptance/non-acceptance of the crane work plan. No crane operations shall begin prior to written acceptance of the crane work plan by the Government.

1.9 ACTIVITY HAZARD ANALYSIS (AHA)

The Activity Hazard Analysis (AHA) format shall be in accordance with USACE EM 385-1-1. Submit the AHA for review at least 15 calendar days prior to the start of each phase. Format subsequent AHA as amendments to the APP. An AHA will be developed by the Contractor for every operation involving a type of work presenting hazards not experienced in previous project operations or where a new work crew or subcontractor is to perform work. The analysis must

identify and evaluate hazards and outline the proposed methods and techniques for the safe completion of each phase of work. At a minimum, define activity being performed, sequence of work, specific safety and health hazards anticipated, control measures (to include personal protective equipment) to eliminate or reduce each hazard to acceptable levels, equipment to be used, inspection requirements, training requirements for all involved, and the competent person in charge of that phase of work. For work with fall hazards, including fall hazards associated with scaffold erection and removal, identify the appropriate fall protection methods used. For work with materials handling equipment, address safeguarding measures related to materials handling equipment. For work requiring excavations, include requirements for safeguarding excavations. An activity requiring an AHA shall not proceed until the AHA has been accepted by the Contracting Officer's representative and a meeting has been conducted by the Contractor to discuss its contents with everyone engaged in the activity, including on-site Government representatives. The Contractor shall document meeting attendance at the preparatory, initial, and follow-up phases of quality control inspection. The AHA shall be continuously reviewed and, when appropriate, modified to address changing site conditions or operations. The analysis should be used during daily inspections to ensure the implementation and effectiveness of the activity's safety and health controls.

The AHA list will be reviewed periodically (at least monthly) at the Contractor supervisory safety meeting and updated as necessary when procedures, scheduling, or hazards change.

Activity hazard analyses shall be updated as necessary to provide an effective response to changing work conditions and activities. The on-site superintendent, site safety and health officer and competent persons used to develop the AHAs, including updates, shall sign and date the AHAs before they are implemented.

1.10 DISPLAY OF SAFETY INFORMATION

Within 1 calendar days after commencement of work, erect a safety bulletin board at the job site. The following information shall be displayed on the safety bulletin board in clear view of the on-site construction personnel, maintained current, and protected against the elements and unauthorized removal:

a. Map denoting the route to the nearest emergency care facility.

b. Emergency phone numbers.

c. Copy of the most up-to-date APP.

d. Current AHA(s).

e. OSHA 300A Form.

f. OSHA Safety and Health Protection-On-The-Job Poster.

g. Confined space entry permit.

h. A sign indicating the number of hours worked since last lost workday accident.

i. Safety and Health Warning Posters.

1.11 SITE SAFETY REFERENCE MATERIALS

Maintain safety-related references applicable to the project, including those listed in the article "References." Maintain applicable equipment manufacturer's manuals.

1.12 EMERGENCY MEDICAL TREATMENT

Contractors will arrange for their own emergency medical treatment. Government has no responsibility to provide emergency medical treatment.

1.13 REPORTS

1.13.1 Accident Reports

a. For recordable injuries and illnesses, and property damage accidents resulting in at least $2,000 in damages, the Prime Contractor shall conduct an accident investigation to establish the root cause(s) of the accident, complete the USACE Accident Report Form 3394 and provide the report to the Contracting Officer within 1 calendar day(s) of the accident. The Contracting Officer will provide copies of any required or special forms.

b. For any weight handling equipment accident (including rigging gear accidents) the Prime Contractor shall conduct an accident investigation to establish the root cause(s) of the accident, complete the WHE Accident Report (Crane and Rigging Gear) form and provide the report to the Contracting Officer within 30 calendar days of the accident. Crane operations shall not proceed until cause is determined and corrective actions have been implemented to the satisfaction of the contracting officer. The Contracting Officer will provide a blank copy of the accident report form.

1.13.2 Accident Notification

Notify the Contracting Officer as soon as practical, but not later than four hours, after any accident meeting the definition of Recordable Injuries or Illnesses or High Visibility Accidents, property damage equal to or greater than $2,000, or any weight handling equipment accident. Information shall include contractor name; contract title; type of contract; name of activity, installation or location where accident occurred; date and time of accident; names of personnel injured; extent of property damage, if any; extent of injury, if known, and brief description of accident (to include type of construction equipment used, PPE used, etc.). Preserve the conditions and evidence on the accident site until the Government investigation team arrives on-site and Government investigation is conducted.

1.13.3 Monthly Exposure Reports

Monthly exposure reporting to the Contracting Officer is required to be attached to the monthly billing request. This report is a compilation of employee-hours worked each month for all site workers, both prime and subcontractor. The Contracting Officer will provide copies of any special forms.

1.13.4 Regulatory Citations and Violations

Contact the Contracting Officer immediately of any OSHA or other regulatory agency inspection or visit, and provide the Contracting Officer with a copy of each citation, report, and contractor response. Correct violations and citations promptly and provide written corrective actions to the Contracting Officer.

1.13.5 Crane Reports

Submit crane inspection reports required in accordance with USACE EM 385-1-1, Appendix H and as specified herein with Daily Reports of Inspections.

1.13.6 Certificate of Compliance

The Contractor shall provide a Certificate of Compliance for each crane entering an activity under this contract (see Contracting Officer for a blank certificate). Certificate shall state that the crane and rigging gear meet applicable OSHA regulations (with the Contractor citing which OSHA regulations are applicable, e.g., cranes used in construction, demolition, or maintenance shall comply with 29 CFR 1926 and USACE EM 385-1-1 section 16 and Appendix H. Certify on the Certificate of Compliance that the crane operator(s) is qualified and trained in the operation of the crane to be used. The Contractor shall also certify that all of its crane operators working on the DOD activity have been trained in the proper use of all safety devices (e.g., anti-two block devices). These certifications shall be posted on the crane.

PART 2 PRODUCTS

2.1 CONFINED SPACE SIGNAGE

The Contractor shall provide permanent signs integral to or securely attached to access covers for new permit-required confined spaces. Signs wording: "DANGER--PERMIT-REQUIRED CONFINED SPACE - DO NOT ENTER -" in bold letters a minimum of 25 mm (one inch) in height and constructed to be clearly legible with all paint removed. The signal word "DANGER" shall be red and readable from 1.52 m (5 feet).

2.2 FALL PROTECTION ANCHORAGE

Fall protection anchorage, conforming to ANSI Z359.1, installed under the supervision of a qualified person in fall protection, shall be left in place for continued customer use and so identified by signage stating the capacity of the anchorage (strength and number of persons who may be tied-off to it at any one time).

PART 3 EXECUTION

3.1 CONSTRUCTION AND/OR OTHER WORK

The Contractor shall comply with USACE EM 385-1-1, NFPA 241, the APP, the AHA, Federal and/or State OSHA regulations, and other related submittals and activity fire and safety regulations. The most stringent standard shall prevail.

3.1.1 Hazardous Material Use

Each hazardous material must receive approval prior to being brought onto the job site or prior to any other use in connection with this contract. Allow a minimum of 10 working days for processing of the request for use of a hazardous material. Any work or storage involving hazardous chemicals or materials must be done in a manner that will not expose Government or Contractor employees to any unsafe or unhealthful conditions. Adequate protective measures must be taken to prevent Government or Contractor employees from being exposed to any hazardous condition that could result from the work or storage. The Prime Contractor shall keep a complete inventory of hazardous materials brought onto the work-site. Approval by the Contracting Officer of protective measures and storage area is required prior to the start of the work.

3.1.2 Hazardous Material Exclusions

Notwithstanding any other hazardous material used in this contract, radioactive materials or instruments capable of producing ionizing/non-ionizing radiation (with the exception of radioactive material and devices used in accordance with USACE EM 385-1-1 such as nuclear density meters for compaction testing and laboratory equipment with radioactive sources) as well as materials which contain asbestos, mercury or polychlorinated biphenyls, di-isocynates, lead-based paint are prohibited. The Contracting Officer, upon written request by the Contractor, may consider exceptions to the use of any of the above excluded materials.

3.1.3 Unforeseen Hazardous Material

The design should have identified materials such as PCB, lead paint, and friable and non-friable asbestos. If material, not indicated, that may be hazardous to human health upon disturbance during construction operations is encountered, stop that portion of work and notify the Contracting Officer immediately. The Government will determine if the material is hazardous. If material is not hazardous or poses no danger, the Government will direct the Contractor to proceed without change. If material is hazardous and handling of the material is necessary to accomplish the work, the Government will issue a modification pursuant to "FAR 52.243-4, Changes" and "FAR 52.236-2, Differing Site Conditions."

3.2 PRE-OUTAGE COORDINATION MEETING

Contractors are required to apply for utility outages at least 15 days in advance. As a minimum, the request should include the location of the outage, utilities being affected, duration of outage and any necessary sketches. Special requirements for electrical outage requests are contained elsewhere in this specification section. Once approved, and prior to beginning work on the utility system requiring shut down, the Contractor shall attend a pre-outage coordination meeting with the Contracting Officer to review the scope of work and the lock-out/tag-out procedures for worker protection. No work will be performed on energized electrical circuits unless proof is provided that no other means exist.

3.3 FALL HAZARD PROTECTION AND PREVENTION PROGRAM

The Contractor shall establish a fall protection and prevention program, for the protection of all employees exposed to fall hazards. The program shall include company policy, identify responsibilities, education and training requirements, fall hazard identification, prevention and control measures, inspection, storage, care and maintenance of fall protection equipment and rescue and escape procedures.

3.3.1 Training

The Contractor shall institute a fall protection training program. As part of the Fall Hazard Protection and Prevention Program, the Contractor shall provide training for each employee who might be exposed to fall hazards. A competent person for fall protection shall provide the training. Training requirements shall be in accordance with USACE EM 385-1-1, section 21.A.16.

3.3.2 Fall Protection Equipment

The Contractor shall enforce use of the fall protection equipment designated for each specific work activity in the Fall Protection and Prevention Plan and/or AHA at all times when an employee is on a surface 1.8 m(6 feet) or more above lower levels. Fall protection systems such as guardrails, personnel fall arrest system, safety nets, etc., are required when working within 1.8m (6 feet) of any leading edge. In addition to the required fall protection systems, safety skiff, personal floatation devices, life rings etc., are required when working above or next to water in accordance with USACE EM 385-1-1, paragraphs 05.I. and 05.J. Personal fall arrest systems are required when working from an articulating or extendible boom, swing stages, or suspended platform. In addition, personal fall arrest systems are required when operating other equipment such as scissor lifts if the work platform is capable of being positioned outside the wheelbase. The need for tying-off in such equipment is to prevent ejection of the employee from the equipment during raising, lowering, or travel. Fall protection must comply with 29 CFR 1926.500, Subpart M and USACE EM 385-1-1.

3.3.2.1 Personal Fall Arrest Equipment

Personal fall arrest equipment, systems, subsystems, and components shall meet ANSI Z359.1. Only a full-body harness with a shock-absorbing lanyard or self-retracting lanyard is an acceptable personal fall arrest device. Body belts may only be used as a positioning device system (for uses such as steel reinforcing assembly and in addition to an approved fall arrest system). Harnesses shall have a fall arrest attachment affixed to the body support (usually a Dorsal D-ring) and specifically designated for attachment to the rest of the system. Only locking snap hooks and carabiners shall be used. Webbing, straps, and ropes shall be made of synthetic fiber. The maximum free fall distance when using fall arrest equipment shall not exceed 1.8 m (6 feet). The total fall distance and any swinging of the worker (pendulum-like motion) that can occur during a fall shall always be taken into consideration when attaching a person to a fall arrest system.

3.3.3 Fall Protection for Roofing Work

Fall protection controls shall be implemented based on the type of roof being constructed and work being performed. The roof area to be accessed shall be

evaluated for its structural integrity including weight-bearing capabilities for the projected loading.

a. Low Sloped Roofs:

(1) For work within 1.8 m (6 feet) of an edge, on low-slope roofs, personnel shall be protected from falling by use of personal fall arrest systems, guardrails, or safety nets.

(2) For work greater than 1.8 m (6 feet) from an edge, warning lines shall be erected and installed in accordance with 29 CFR 1926.500 and USACE EM 385-1-1.

b. Steep Roofs: Work on steep roofs requires a personal fall arrest system, guardrails with toe-boards, or safety nets. This requirement also includes residential or housing type construction.

3.3.4 Safety Nets

If safety nets are used as the selected fall protection system on the project, they shall be provided at unguarded work places, leading edge work or when working over water, machinery, dangerous operations or other surfaces where the use of ladders, scaffolds, catch platforms, temporary floors, fall arrest systems or restraint/positioning systems are impractical. Safety nets shall be tested immediately after installation with a drop test of 181.4 kg (400 pounds) dropped from the same elevation a person might fall, and every six months thereafter.

3.3.5 Existing Anchorage

Existing anchorages, to be used for attachment of personal fall arrest equipment, shall be certified (or re-certified) by a qualified person for fall protection in accordance with ANSI Z359.1. Exiting horizontal lifeline anchorages shall be certified (or re-certified) by a registered professional engineer with experience in designing horizontal lifeline systems.

3.3.6 Horizontal Lifelines

Horizontal lifelines shall be designed, installed, certified and used under the supervision of a qualified person for fall protection as part of a complete fall arrest system which maintains a safety factor of 2 (29 CFR 1926.500).

3.3.7 Guardrail Systems

Guardrails shall consist of top and mid-rails, post and toe boards. The top edge height of standard railing must be 42 inches plus or minus 3 inches above the walking/working level. When mid-rails are used, they must be installed at a height midway between the top edge of the guardrail system and the walking/working level. Posts shall be placed no more than 8 feet apart (29 CFR 1926.500 and USACE EM 385-1-1).

3.3.8 Rescue and Evacuation Procedures

When personal fall arrest systems are used, the contractor must ensure that the mishap victim can self-rescue or can be rescued promptly should a fall occur. A Rescue and Evacuation Plan shall be prepared by the contractor and

include a detailed discussion of the following: methods of rescue; methods of self-rescue; equipment used; training requirement; specialized training for the rescuers; procedures for requesting rescue and medical assistance; and transportation routes to a medical facility. The Rescue and Evacuation Plan shall be included in the Activity Hazard Analysis (AHA) for the phase of work, in the Fall Protection and Prevention (FP&P) Plan, and the Accident Prevention Plan (APP).

3.4 SCAFFOLDING

Employees shall be provided with a safe means of access to the work area on the scaffold. Climbing of any scaffold braces or supports not specifically designed for access is prohibited. Access to scaffold platforms greater than 6 m (20 feet) in height shall be accessed by use of a scaffold stair system. Vertical ladders commonly provided by scaffold system manufacturers shall not be used for accessing scaffold platforms greater than 6 m (20 feet) in height. The use of an adequate gate is required. Contractor shall ensure that employees are qualified to perform scaffold erection and dismantling. Do not use scaffold without the capability of supporting at least four times the maximum intended load or without appropriate fall protection as delineated in the accepted fall protection and prevention plan. Stationary scaffolds must be attached to structural building components to safeguard against tipping forward or backward. Special care shall be given to ensure scaffold systems are not overloaded. Side brackets used to extend scaffold platforms on self-supported scaffold systems for the storage of material is prohibited. The first tie-in shall be at the height equal to 4 times the width of the smallest dimension of the scaffold base. Work platforms shall be placed on mud sills. Scaffold or work platform erectors shall have fall protection during the erection and dismantling of scaffolding or work platforms that are more than six feet. Delineate fall protection requirements when working above six feet or above dangerous operations in the Fall Protection and Prevention (FP&P) Plan and Activity Hazard Analysis (AHA) for the phase of work.

3.4.1 Stilts

The use of stilts for gaining additional height in construction, renovation, repair or maintenance work is prohibited.

3.5 EQUIPMENT

3.5.1 Material Handling Equipment

a. Material handling equipment such as forklifts shall not be modified with work platform attachments for supporting employees unless specifically delineated in the manufacturer's printed operating instructions.

b. The use of hooks on equipment for lifting of material must be in accordance with manufacturer's printed instructions.

c. Operators of forklifts or power industrial trucks shall be licensed in accordance with OSHA.

3.5.2 Weight Handling Equipment

a. Cranes must be equipped with:

(1) Load indicating devices (LIDs) and a boom angle or radius indicator,

(2) or load moment indicating devices (LMIs).

(3) Anti-two block prevention devices.

(4) Boom hoist hydraulic relief valve, disconnect, or shutoff (stops hoist when boom reaches a predetermined high angle).

(5) Boom length indicator (for telescoping booms).

(6) Device to prevent uncontrolled lowering of a telescoping hydraulic boom.

(7) Device to prevent uncontrolled retraction of a telescoping hydraulic boom.

(8) Wind indicating device.

(9) Drum rotation indicator.

(10) Barge mounted mobile cranes shall be equipped with a load indicating device, a wind indicating device and a marine type list and trim indicator readable in one-half degree increments.

b. The Contractor shall notify the Contracting Officer 15 days in advance of any cranes entering the activity so that necessary quality assurance spot checks can be coordinated. Contractor's operator shall remain with the crane during the spot check.

c. The Contractor shall comply with the crane manufacturer's specifications and limitations for erection and operation of cranes and hoists used in support of the work. Erection shall be performed under the supervision of a designated person (as defined in ASME B30.5). All testing shall be performed in accordance with the manufacturer's recommended procedures.

d. The Contractor shall comply with ASME B30.5 for mobile and locomotive cranes, ASME B30.22 for articulating boom cranes, ASME B30.3 for construction tower cranes, and ASME B30.8 for floating cranes and floating derricks.

e. The presence of Government personnel does not relieve the Contractor of an obligation to comply with all applicable safety regulations. The Government will investigate all complaints of unsafe or unhealthful working conditions received in writing from contractor employees, federal civilian employees, or military personnel.

f. Each load shall be rigged/attached independently to the hook/master-link in such a fashion that the load cannot slide or otherwise become detached. Christmas-tree lifting (multiple rigged materials) is not allowed.

g. Under no circumstance shall a Contractor make a lift at or above 90% of the cranes rated capacity in any configuration.

h. When operating in the vicinity of overhead transmission lines, operators and riggers shall be alert to this special hazard and shall

follow the requirements of USACE EM 385-1-1 section 11 and ASME B30.5 or ASME B30.22 as applicable.

i. Crane suspended personnel work platforms (baskets) shall not be used unless the Contractor proves that using any other access to the work location would provide a greater hazard to the workers or is impossible. Personnel shall not be lifted with a line hoist or friction crane.

j. A fire extinguisher having a minimum rating of 10BC and a minimum nominal capacity of 5lb of extinguishing agent shall be available at all operator stations or crane cabs. Portable fire extinguishers shall be inspected, maintained, and recharged as specified in NFPA 10, Standard for Portable Fire Extinguishers.

k. All employees shall be kept clear of loads about to be lifted and of suspended loads.

l. A weight handling equipment operator shall not leave his position at the controls while a load is suspended.

m. The Contractor shall use cribbing when performing lifts on outriggers.

n. The crane hook/block must be positioned directly over the load. Side loading of the crane is prohibited.

o. A physical barricade must be positioned to prevent personnel from entering the counterweight swing (tail swing) area of the crane.

p. A substantial and durable rating chart containing legible letters and figures shall be provided with each crane and securely mounted onto the crane cab in a location allowing easy reading by the operator while seated in the control station.

q. Certification records which include the date of inspection, signature of the person performing the inspection, and the serial number or other identifier of the crane that was inspected shall always be available for review by Contracting Officer personnel.

r. Written reports listing the load test procedures used along with any repairs or alterations performed on the crane shall be available for review by Contracting Officer personnel.

s. The Contractor shall certify that all crane operators have been trained in proper use of all safety devices (e.g. anti-two block devices).

3.5.3 Equipment and Mechanized Equipment

a. Equipment shall be operated by designated qualified operators. Proof of qualifications shall be kept on the project site for review.

b. Manufacture specifications or owner's manual for the equipment shall be on-site and reviewed for additional safety precautions or requirements that are sometimes not identified by OSHA or USACE EM 385-

1-1. Such additional safety precautions or requirements shall be incorporated into the AHAs.

c. Equipment and mechanized equipment shall be inspected in accordance with manufacturer's recommendations for safe operation by a competent person prior to being placed into use.

d. Daily checks or tests shall be conducted and documented on equipment and mechanized equipment by designated competent persons.

3.6 EXCAVATIONS

The competent person for excavations performed as a result of contract work shall be on-site when excavation work is being performed, and shall inspect, and document the excavations daily prior to entry by workers. The competent person must evaluate all hazards, including atmospheric, that may be associated with the work, and shall have the resources necessary to correct hazards promptly. The competent person shall perform soil classification in accordance with 29 CFR 1926.

3.6.1 Utility Locations

Prior to digging, the appropriate digging permit must be obtained. All underground utilities in the work area must be positively identified by a private utility locating service in addition to any station locating service and coordinated with the station utility department. Any markings made during the utility investigation must be maintained throughout the contract.

3.6.2 Utility Location Verification

The Contractor must physically verify underground utility locations by hand digging using wood or fiberglass handled tools when any adjacent construction work is expected to come within three feet of the underground system. Digging within 0.061 m (2 feet) of a known utility must not be performed by means of mechanical equipment; hand digging shall be used. If construction is parallel to an existing utility the utility shall be exposed by hand digging every 30.5 m (100 feet) if parallel within 1.5 m (5 feet) of the excavation.

3.6.3 Utilities with Concrete Slabs

Utilities located within concrete slabs or pier decks, bridges, and the like are extremely difficult to identify. The location must be coordinated with station utility departments in addition to a private locating service. Outages on system utilities shall be used in circumstances where concrete chipping, saw cutting, or core drilling is required and utilities are unable to be completely identified.

3.6.4 Shoring Systems

Trench and shoring systems must be identified in the accepted safety plan and AHA. Manufacture tabulated data and specifications or registered engineer tabulated data for shoring or benching systems shall be readily available on-site for review. Job-made shoring or shielding shall have the registered professional engineer stamp, specifications, and tabulated data. Extreme care must be used when excavating near direct burial electric underground cables.

3.6.5 Trenching Machinery

Trenching machines with digging chain drives shall be operated only when the spotters/laborers are in plain view of the operator. Operator and spotters/laborers shall be provided training on the hazards of the digging chain drives with emphasis on the distance that needs to be maintained when the digging chain is operating. Documentation of the training shall be kept on file at the project site.

3.7 ELECTRICAL

3.7.1 Conduct of Electrical Work

Underground electrical spaces must be certified safe for entry before entering to conduct work. Cables that will be cut must be positively identified and de-energized prior to performing each cut. Positive cable identification must be made prior to submitting any outage request for electrical systems. Arrangements are to be coordinated with the Contracting Officer and Station Utilities for identification. The Contracting Officer will not accept an outage request until the Contractor satisfactorily documents that the circuits have been clearly identified. Perform all high voltage cable cutting remotely using hydraulic cutting tool. When racking in or live switching of circuit breakers, no additional person other than the switch operator will be allowed in the space during the actual operation. Plan so that work near energized parts is minimized to the fullest extent possible. Use of electrical outages clear of any energized electrical sources is the preferred method. When working in energized substations, only qualified electrical workers shall be permitted to enter. When work requires Contractor to work near energized circuits as defined by the NFPA 70, high voltage personnel must use personal protective equipment that includes, as a minimum, electrical hard hat, safety shoes, insulating gloves with leather protective sleeves, fire retarding shirts, coveralls, face shields, and safety glasses. In addition, provide electrical arc flash protection for personnel as required. Insulating blankets, hearing protection, and switching suits may also be required, depending on the specific job and as delineated in the Contractor's AHA.

3.7.2 Portable Extension Cords

Portable extension cords shall be sized in accordance with manufacturer ratings for the tool to be powered and protected from damage. All damaged extension cords shall be immediately removed from service. Portable extension cords shall meet the requirements of NFPA 70.

3.8 WORK IN CONFINED SPACES

The Contractor shall comply with the requirements in Section 06.I of USACE EM 385-1-1 and OSHA 29 CFR 1910.146. Any potential for a hazard in the confined space requires a permit system to be used.

a. Entry Procedures. Prohibit entry into a confined space by personnel for any purpose, including hot work, until the qualified person has conducted appropriate tests to ensure the confined or enclosed space is safe for the work intended and that all potential hazards are controlled or eliminated and documented. (See Section 06.I.05 of USACE EM 385-1-1 for entry procedures.) All hazards

pertaining to the space shall be reviewed with each employee during review of the AHA.

b. Forced air ventilation is required for all confined space entry operations and the minimum air exchange requirements must be maintained to ensure exposure to any hazardous atmosphere is kept below its' action level.

c. Ensure the use of rescue and retrieval devices in confined spaces greater than 1.5 m (5 feet) in depth. Conform to Sections 06.I.09, 06.I.10 and 06.I.11 of USACE EM 385-1-1.

d. Sewer wet wells require continuous atmosphere monitoring with audible alarm for toxic gas detection.

e. Include training information for employees who will be involved as entrants and attendants for the work. Conform to Section 06.I.06 of USACE EM 385-1-1.

f. Daily Entry Permit. Post the permit in a conspicuous place close to the confined space entrance.

3.9 HOUSEKEEPING

3.9.1 Clean-Up

All debris in work areas shall be cleaned up daily or more frequently if necessary. Construction debris may be temporarily located in an approved location, however garbage accumulation must be removed each day.

3.9.2 Falling Object Protection

All areas must be barricaded to safeguard employees. When working overhead, Barricade the area below to prevent entry by unauthorized employees. Construction warning tape and signs shall be posted so they are clearly visible from all possible access points. When employees are working overhead all tools and equipment shall be secured so that they will not fall. When using guardrail as falling object protection, all openings shall be small enough to prevent passage of potential falling objects.

END OF SECTION 01525

US Army Corps
of Engineers®
Nashville District

ORNP 385-1-2
May 1986

Contractor Guidelines For:

1. The Preparation of the Accident Prevention Proposal (Safety Plan)

2. The Preparation of the Activity Hazard Analysis

APPENDIX A

HELPFUL HINTS FOR THE PREPARATION OF THE CONTRACTOR'S ACCIDENT PREVENTION PROPOSAL

1. The following are minimum considerations for developing the Contractor's Accident Prevention Proposal. These helpful hints raise a number of basic questions that need to be answered for the Contractor's safety plan to be an effective management tool for use by on-site supervision. This plan shall be specific for this job.

a. Time Of Submittal. The safety plan and the activity hazard analysis for the first phases of the job shall be acceptable prior to start of work. The plan and analysis shall be submitted for review within ten (10) calendar days after notice of award so that discussion can take place at the pre-construction conference. Job hazard analysis for later phases of work shall be acceptable prior to the start of that phase. It is recommended that the activity hazard analysis for the next phase of work be submitted twenty days before scheduled phase start in order to give ample time for review. The safety plan shall contain a list of the phases to complete the works. Each phase shall have an anticipated start date. On short jobs one submittal covering the total job will be sufficient.

b. Responsible Individual(s). Who will be responsible for enforcing the safety program and what are the basic duties? How will this person be held accountable? Include a statement that there will be compliance with pertinent provisions of the U.S. Army Corps of Engineers Safety and Health Requirements Manual, EM 385-1-1.

c. Subcontractor Supervision. What procedures will be followed to assure that Subcontractor activities are fully integrated into the project safety plan and activity hazards analysis?

d. Indoctrination of New Employees Before Start of Work. Every employee is required to receive an initial safety briefing prior to starting work. The safety plan shall establish the procedure for ensuring the following items are covered:

(1) General safety policy and pertinent provisions of EM-385-1-1.

(2) Requirements for employee and project safety.

(3) Employee's responsibilities for property and safety of others.

(4) Employee's responsibilities for reporting all accidents.

(5) Medical facilities and required treatment.

(6) Procedures for reporting or correcting unsafe conditions or practices.

(7) Safe clearance procedures.

(8) Fire fighting and other emergency procedures.

(9) Activity hazard analysis.

(10) Personal protective equipment.

e. On-the Job Safety Meetings.

(1) When and where will monthly safety meetings for all supervisors be held? Who will conduct the meetings and what will be covered?

(2) How will the weekly “tool box” meetings be conducted?

f. Accident Reporting. The contract requires prompt reporting of injuries, fire, and property damage. Initial reports must be made immediately to the on-site Government representative and written reports shall be submitted within one to four working days. How does the safety plan reflect responsibilities assigned for immediate oral reporting, accident investigation, determining proper corrective action, and preparation of reports?

g. Sanitary Facilities. What toilet facilities will be provided considering the number and distribution of employees? What other considerations are planned for drinking water and washing facilities?

h. First Aid and Medical. Describe first aid facilities and qualifications of attendant. List telephone numbers of physician, ambulance, and hospital.

i. Housekeeping. How will access ways to work areas be maintained during work hours? What procedures will be followed to assure daily cleanup?

j. Fire Protection. Considering the availability of existing fire protection, what general types and size of extinguishers and fire barrels will be required to protect buildings, shops, and storage areas as well as to deal with special hazards such as welding and flammable liquids? Name the local professional fire fighters. List their telephone number.

k. Machinery and Mechanized Equipment. How will inspection of cranes, trucks, and other mechanical equipment be accomplished? Frequency, by whom, what type of records will be kept?

2. Posters, contests, safety awards help develop positive attitudes toward safety rules. What methods, if any, will be used on this project? Most accidents are preventable by well thought out and executed safety plans.

APPENDIX B

GUIDELINES FOR THE PREPARATION OF ACTIVITY HAZARDS ANALYSIS

1. Activity Hazards Analysis Development. Before starting any major phase of work an activity hazards analysis shall be developed and reviewed with the Government representative. This analysis will evaluate anticipated hazards and outline the proposed methods and techniques which will be utilized to accomplish the work in a safe manner.

2. Phases of Work. Listed are examples of major phases of work, but this list is not all inclusive. Phases of work shall be tailored to the specific characteristics of the contract.

Clearing and Grubbing
Earthwork
Trench Excavation
Blasting
Concrete Placement
Steel Erection
Masonry
Electrical Work, Exterior
Mechanical Work
Carpentry

3. Sample Activity Hazards Analysis. The enclosed sample shows a possible format for a phase safety plan that might be submitted on a representative project. This sample incorporates a phase of work, the safety hazards that may be encountered, and precautionary actions that will be taken to overcome these hazards. Each safety hazard identified in the third vertical column must be accompanied by the appropriate paragraph reference number from EM 385-1-1. If none exists in EM 385-1-1, so state in the third vertical column of the Activity Hazard Analysis.

4. Indoctrination. Employees performing the work must be made aware of the activity hazard analysis. For this reason, an important part of any phase plan is the indoctrination of all employees who will be performing the work.

SAMPLE

ACTIVITY HAZARD ANALYSIS			
Contract No. DACW62-96-C-0000		Project Install Water and Sewer Lines	Facility Blue Heron Recreational Area
Date 1 October 1996		Location Big South Fork	Estimated Start Date 19 November 1996
Item	Phase of Work	Safety Hazard	Precautionary Actions to be taken
1	Trench Excavation	Hitting Existing Utilities (par. 25.A.10)	1. Find and mark existing utilities before excavating. 2. Use care while excavating. 3. Shore existing utilities crossing trench. 4. Instruct operator. 5. Watch for overhead electrical lines.
		Cave-Ins (pars. 25.B.03, 25.C.01 and 25.D.05)	1. Slope sides, depending on depth and soil type. 2. Shoring when necessary. 3. Lay back material at least 2 ft. from edge depending on depth & soil type. 4. Have access ladder or steps in other than shallow trenches. 5. Backfill as soon as possible. 6. Instruct workmen as to cave-ins hazards and precautions.
		Head injuries from falling rocks or clods (par. 25.A.07)	1. Wear hardhats. 2. Scale potential fuels from sides.
		Backing over workmen (par. 16.B.01 and 25.A.09)	1. Back-up alarms on equipment. 2. Have helper to guide operator while backing. 3. Instruct workmen not to stand or walk behind equipment.
		Pedestrian Accidents (pars. 25.B.01 and 25.B.03	1. Rope off or fence trench. 2. Mark clearly. 3. Backfill as soon as possible.
		Back Injuries (par. 14.A.01)	1. Instruct workmen how to lift materials. 2. Instruct workmen to get help and/or to use lifting equipment.
		Falling "(pars. 25.B.01 and 25.B.03	1. Maintain employee alertness in and around trenches.

SECTION 01600

BRIDGE CRANE REHABILITATION

TABLE OF CONTENTS

PART 1 GENERAL

1.1 GENERAL INFORMATION
1.2 REFERENCES
1.3 SUBMITTALS
1.4 DATA, CAPACITIES, SPEEDS AND TRAVEL FOR WOLF CREEK
1.5 DATA, CAPACITIES, SPEEDS AND TRAVEL FOR CENTER HILL
1.6 WORK AREA

PART 2 PRODUCTS

2.1 FIRE EXTINGUISHER

PART 3 EXECUTION

3.1 QUALIFICATIONS
3.2 REHABILITATION PROCEDURE
3.3 CLEANUP
3.4 PRE-REHABILITATION INSPECTION
3.5 REHABILITATION INSPECTION
3.6 POST-REHABILITATION INSPECTION
3.7 ACCEPTANCE TESTS
3.8 OPERATING INSTRUCTIONS
3.9 MANUFACTURER'S SERVICES
3.10 FIELD TRAINING

SECTION 01600

BRIDGE CRANE REHABILITATION

PART 1 GENERAL

1.1 GENERAL INFORMATION

This section covers rehabilitation of the 250 ton bridge crane at Wolf Creek Dam and Center Hill Dam. Detailed shop drawings shall be furnished showing assembly views and all details required to rehabilitate each crane. Metalwork fabrication shall be in accordance with the applicable requirements of SECTION 05101. Materials shall be in accordance with applicable paragraphs of SECTION 05502WC and 05502CH. Metal surfaces shall be painted in accordance with requirements of SECTION 09900. Mechanical work shall be in accordance with requirements of SECTION 15000WC and 15000CH. Electrical work shall be in accordance with requirements of SECTION 16050WC and 16050CH.

1.2 REFERENCES

The publications listed below form a part of this specification to the extent referenced. The publications are referenced to in the text by basic designation only.

ASME INTERNATIONAL (ASME)

ASME B30.2	(2001) Overhead and Gantry Cranes (Top Running Bridge, Single or Multiple Girder, Top running Trolley Hoist)
ASME B30.10	(1993) Hooks

U.S. ARMY CORPS OF ENGINEERS (USACE)

EM 385-1-1	(2003) Safety and Health Requirement Manual

1.3 SUBMITTALS

Government approval is required for all submittals with a "GA" designation; submittals having an "FIO" designation are for information only. The following shall be submitted as stated below in accordance with SECTION 01330

SD-01 Data

Crane Inspectors, Craftsmen, and Crane Operators qualifications, see paragraph 3.1; GA

Complete rehabilitation procedure, see paragraph 3.2; GA

Pre-rehabilitation inspection procedure, see paragraph 3.4; GA

Post-rehabilitation inspection procedure, see paragraph 3.6; GA

Acceptance Test Procedure, see paragraph 3.7; GA

Test Weight Handling Procedure, see paragraph 3.7.2; GA

Detailed Drawings of Test Weight Configuration, see paragraph 3.7.2; GA

SD-09 Reports

Pre-Rehabilitation Inspection Report, see para 3.4; FIO

Post-Rehabilitation Inspection Report, see para 3.6; FIO

Preliminary No-Load Test Results, see paragraph 3.6.2; GA

1.4 DATA, CAPACITIES, SPEEDS AND TRAVEL FOR WOLF CREEK

1.4.1 General

Rated capacity of the main hoist is defined as the rated capacity of the hook. Rated capacity of the bridge crane is defined as the rated capacity of both main hoists. The rated capacity of the auxiliary hoist is defined as the rated capacity at the hook. Rated hoisting speed is defined as the speed when raising at rated capacity. Rated bridge travel speed is defined as the travel speed when traveling at rated capacity. Rated travel speed of the trolley is defined as the travel speed when operating at rated capacity. Data, capacities, travel distances, and rated speeds of the cranes are as follows:

a. Rated Capacity, Tons (2,000 pounds).....250

b. Rated Capacity per trolley, Tons.....125

c. Travel, Feet approx..... 432

d. Rated Travel Speed, Feet Per Minute.....62.5

1.4.2 Main Hoist

a. Rated Capacity, Tons.....125

b. Rated Hoisting Speed, Feet Per Minute.....4

c. Hook Travel:

Upper limit of travel not lower than Elevation.....626

Lower limit of travel not higher than Elevation.....556

d. Bridge Span, Feet.....70

e. Rated Trolley Travel Speed, Feet Per Minute.....25

1.4.3 Auxiliary Hoist

a. Rated Capacity, Tons.....25

b. Rated Hoisting Speed, (FPM).....25

c. Hook Travel:

Upper limit of travel not lower than Elevation.....629

Lower limit of travel not higher than Elevation.....557

1.5 DATA, CAPACITIES, SPEEDS AND TRAVEL FOR CENTER HILL

1.5.1 General

Rated capacity of the main hoist is defined as the rated capacity of the hook. Rated capacity of the bridge crane is defined as the rated capacity of both main hoists. The rated capacity of the auxiliary hoist is defined as the rated capacity at the hook. Rated hoisting speed is

defined as the speed when raising at rated capacity. Rated bridge travel speed is defined as the travel speed when traveling at rated capacity. Rated travel speed of the trolley is defined as the travel speed when operating at rated capacity. Data, capacities, travel distances, and rated speeds of the crane are as follows:

1.5.2 Bridge Crane

a. Rated Capacity, Tons (2,000 pounds).....250

b. Rated Capacity per trolley, Tons.....125

c. Travel, Feet approx..... 172

d. Rated Travel Speed, Feet Per Minute.....90

1.5.3 Main Hoist

a. Rated Capacity, Tons.....125

b. Rated Hoisting Speed, Feet Per Minute.....4

c. Hook Travel:

Upper limit of travel not lower than Elevation.....560

Lower limit of travel not higher than Elevation.....487

d. Bridge Span, Feet.....70

e. Rated Trolley Travel Speed, Feet Per Minute.....30

1.5.4 Auxiliary Hoist

a. Rated Capacity, Tons.....25

b. Rated Hoisting Speed, (FPM).....25

c. Hook Travel:

Upper limit of travel not lower than Elevation.....563

Lower limit of travel not higher than Elevation.....487

1.6 WORK AREA

The work area shall be the station service bay. See reference drawings Q-4/730 and Q-2/730 for details.

PART 2 PRODUCTS

2.1 FIRE EXTINGUISHER

Five fire extinguishers shall be furnished. One will be installed in the operators cab, one in each of the trolleys, and one on each of the bridge walkways. They shall be mounted approximately four feet from the floor. The fire extinguishers shall have a minimum Underwriters Laboratory rating of 4A:60B:C and be of the stored pressure, dry chemical, rechargeable, portable type. They shall have a visual pressure gauge, hose, safety pin, squeeze handle and be wall mounted.

PART 3 EXECUTION

3.1 QUALIFICATIONS

3.1.1 General

Data showing that crane inspectors, craftsmen, and crane operators meet the following qualifications shall be submitted for approval:

3.1.2 Qualified Crane Inspectors

Crane inspectors shall possess the following:

a. Have experience and knowledge in performing inspection on bridge cranes of similar size and capacity as the Wolf Creek bridge crane.

b. Certifications showing they have attended crane inspection training seminars at established institutions.

c. Are employed as crane inspectors for at least two years by a firm specializing in crane inspection work.

3.1.3 Qualified Craftsmen

Craftsmen shall possess the following:

a. Have experience and knowledge in performing work on bridge cranes.

b. Have performed work on bridge cranes for at least 5 years.

c. Are employed for at least two years by a firm specializing in crane repair and rehabilitation work.

3.1.4 Qualified Crane Operators

Crane operators shall have experience and knowledge in operating bridge cranes of similar capacity as the Wolf Creek and Center Hill bridge cranes. The crane operator shall meet the project personnel's satisfaction that the crane operator has the ability to operate the crane.

3.2 REHABILITATION PROCEDURE

A complete rehabilitation procedure for all work done on this job shall be submitted and approved prior to start of work. Long lead items may be ordered prior to submittal and approval of the rehabilitation procedure. The procedure shall include, but not be limited to the following:

a. Step by step rehabilitation procedure.

b. Schedule of work.

c. Types of equipment used on site including work platforms, cranes, scissor lifts, etc.

d. Methods of removing and reinstalling components.

e. Safety precautions.

As many components as possible shall be furnished and ready for installation before starting work on the cranes to minimize downtime of cranes.

3.3 CLEANUP

All components of the bridge crane shall be cleaned up during the rehabilitation of the crane and be completed prior to the post-rehabilitation inspection. All grease, oil, dirt, dust, debris, and any other foreign objects shall be cleaned up using appropriate cleanup methods. Cleanup methods include sweeping, vacuuming, wiping/washing using soap and water, solvents, etc. Additional cleanup requirements will be specified in other paragraphs. The crane corbels and crane rails shall be vacuumed and any grease shall be cleaned up.

3.4 PRE-REHABILITATION INSPECTION

Before any rehabilitation work is performed, an inspection shall be completed to determine if there are problems that require corrective action. A comprehensive pre-rehabilitation inspection procedure shall be submitted and approved before any pre-rehabilitation inspection can start. All motions of the crane without load shall be tested as follows:

a. The bridge shall travel the full length of the powerhouse.

b. The trolleys shall travel the full length of the bridge.

c. All hoists shall raise and lower blocks as far as possible.

Excessive skewing, misalignment, abnormal noises and vibrations, improper adjustment, overheating and any other possible defects shall be recorded and brought to the GQAR's attention.

Inspection shall be in accordance with applicable standards including ASME B30.2, Overhead and Gantry Cranes and ASME 30.10, Hooks. Inspections shall meet or exceed the requirements of periodic inspection as stated in the standards. A report shall be prepared and submitted stating the findings of inspections. The Government shall be notified of the date and time of the inspections. Any deficiencies found shall be brought to the attention of GQAR. Inspections shall be performed by qualified crane inspectors in the presence of the GQAR, although disassembling and reassembling may be performed by qualified craftsmen.

Any additional work requirements resulting from this inspection shall be included in a contract modification with an equitable adjustment to contract price and time.

3.5 REHABILITATION INSPECTION

All crane components, including the following, shall be inspected for wear, distortion, deformation, cracks, nicks, corrosion, and any possible defect:

Reducers
Drums
Bearing stands and housings
Bearings
Drum gears and pinions
Sheaves
Couplings
Structural frame
Wheel truck assemblies
Shafting

Bumpers
Lifting beam
Hooks
Bridge and trolley rails and fasteners
Safety Devices

Inspection shall be in accordance with applicable standards including ASME B30.2, Overhead and Gantry Cranes and ASME B30.10, Hooks. Inspections shall meet or exceed the requirements of periodic inspection as stated in the standards. Records shall be kept of findings of inspections. Any deficiencies found shall be brought to the attention of the Government. Qualified crane inspectors shall perform inspections, although qualified craftsmen shall perform disassembling and reassembling, if required. Disassembly for inspection is required if it is specifically stated in the specifications or on the drawings. Inspections includes disassembly of components, if required, and thorough cleaning of the components for optimum inspecting. After inspection and performing the work on the crane as directed, components shall be reassembled, adjusted, lubricated, and made ready for service.

3.6 POST-REHABILITATION INSPECTION AND PRELIMINARY NO-LOAD TEST

3.6.1 Post-Rehabilitation Inspection

ALL REHABILITATION WORK INCLUDING ADJUSTMENTS, LUBRICATION, AND CLEAN-UP SHALL BE COMPLETED PRIOR TO PERFORMING POST-REHABILITATION INSPECTION. Painting may be performed after testing. After completion of rehabilitation, and as a precondition to the start of load test, the Contractor shall submit the following to the government representative for each crane:

a. Contractor’s Certificate of Compliance (C of C) to list any changes of parts and/or configuration of parts in the hoist equipment, and to certify that any such changes are consistent with the rated load. If no hoist equipment changes were made, the (C of C) will so state.

b. Subordinate documentation, in the form of vendor or OEM Certificates of Compliance, Mill Test Reports (MTR’s), and/or Contractor’s engineering calculations, for any listed changes.

A complete post-rehabilitation inspection procedure shall be submitted and approved before any post-rehabilitation inspection can start. Post-rehabilitation inspection shall be performed by qualified crane inspectors and findings recorded. After the crane has been completely reassembled, adjusted, lubricated, cleaned-up, and otherwise made ready for operation, it will be subjected to the following inspections and tests:

a. Inspection in accordance with ASME B30.2, Overhead and Gantry Cranes (Periodic Inspection).

b. The bridge, trolley, and each hoist will be operated in each direction of travel for the full travel distance without load. The equipment will be examined for misalignment, excessive skewing, improper adjustment, abnormal noises, overheating, and other possible defects.

c. Limit switches will be checked for accuracy of settings.

d. All incidental equipment including load cells, cable carriers, lights, and brakes will be checked for proper operation.

e. Readings (voltage, current, frequency, and motor speed) shall be recorded for each speed point for hoist and travel motion. Readings shall be checked with specification requirements.

If defects, such as misalignment, excessive skewing, improper adjustment, abnormal noises, overheating, or other defects become apparent, the inspection shall be discontinued until proper action has been taken to correct the conditions. After corrective action has been taken, the inspection shall be continued or rerun as directed. A test report shall be submitted.

3.6.2 Preliminary No-Load Test

AFTER SUCCESSFULLY PASSING THE POST-REHABILITATION INSPECTION, THE PRELIMINARY NO-LOAD TEST SHALL BE PERFORMED.

The No-Load test and performance test at no-load shall be performed prior to the acceptance testing. Test all functions of the crane and make all adjustments as required. See paragraphs 3.7.5, 3.7.6, 3.7.9, and 3.7.11. Tests results shall be submitted for approval. THE GOVERNMENT WILL NOT ATTEND THE ACCEPTANCE TESTING UNTIL THE FOLLOWING HAVE BEEN COMPLETED:

a. Submittal and Approval of Test Procedure, Test Weight Handling Procedure, and Detailed Drawings of Test Weight Configuration.

b. Rehabilitation Work

c. Adjustments and Lubrication

d. Clean-Up

e. Post-Rehabilitation Inspection

f. Successful Preliminary No-Load Test

g. Submittal of Preliminary No-Load Test Results

3.7 ACCEPTANCE TESTS

3.7.1 General

AFTER SUCCESSFULLY PASSING THE PRELIMINARY NO-LOAD TESTING AND THE TEST RESULTS HAVE BEEN ACCEPTED, THE ACCEPTANCE TESTS SHALL BE PERFORMED. No testing shall be performed without an approved acceptance test procedure, and approved preliminary on-load test results. The test procedure shall address all safety issues, including hard hats, communications, area control, accident contacts, and rigging methods. Provide all personnel and equipment necessary to conduct the tests including but not limited to crane operators, riggers, data recorders (personnel), rigging gear, test weights, and measuring instruments. Testing shall be performed in the presence of the Government. Notify the Government, at least 20 days in advance, the date of the acceptance test. Acceptance testing shall begin on a Tuesday, if Monday is not a Federal Holiday; otherwise it shall start on a Wednesday. The acceptance test shall be performed in the work areas.

3.7.2 Test Weights

The type of test weights used by the Contractor in the tests shall be submitted for approval. Detailed weight handling procedures, test weight handling devices, and detailed “to scale” drawings showing test weight configuration with the crane, powerhouse, generator, and other features shown on the drawings shall be submitted as part of the acceptance test procedure. If water bags are used, provide means of pumping water into the water bags, means of draining the bags and the Contractor shall include fault recovery in test plan. Test loads shall

be plus 5 percent, minus 0 percent. Load on the Erection Bay floor shall not exceed 1,000 lbs. per sq. foot.

3.7.3 Test Sequence

The crane shall be tested according to the applicable paragraphs of this procedure in the sequence provided.

3.7.4 Hooks

Hooks shall be measured for hook throat spread before and after load test. A throat dimension base measurement shall be established by installing two tram points and measuring the distance between these tram points (to within 1/64 inch). This base dimension shall be recorded. The distance between tram points shall be measured before and after load test.

3.7.5 Equipment Monitoring

During the acceptance test, improper operation or poor condition of safety devices, electrical components, mechanical equipment, and structural assemblies shall be monitored. Observed defects critical to continued testing shall be reported immediately to the GQAR and testing shall be suspended until the deficiency is corrected. During and immediately following the acceptance test, the following inspections shall be made:

a. Inspect for evidence of bending, warping, permanent deformation, cracking or malfunction of structural components.

b. Inspect for evidence of slippage in wire rope sockets and fittings.

c. Check for overheating in brake operation; check for proper stopping. All safety devices, including emergency stop switches and POWER OFF pushbuttons, shall be tested and inspected separately to verify proper operation of the brakes.

d. Check for abnormal noise or vibration and overheating in machinery drive components.

e. Check wire rope sheaves and drum spooling for proper operation, freedom of movement, abnormal noise or vibration.

f. Check electrical drive components for proper operation, freedom from chatter, noise or overheating.

g. Inspect external gears for abnormal wear patterns, damage, or inadequate lubrication.

h. Inspect for arcing, leaks, frayed or crushed ropes, loose fall hazards, hoist machinery components, sway and proper clearance and contact.

3.7.6 No-Load Testing

3.7.6.1 Hoist Operating and Limit Switch Test

The load hook shall be raised and lowered through the full range of normal travel at rated speed and other speeds of the crane. The load hook shall be stopped below the limit switch upper setting. In slow speed only, proper operation of upper and lower limit switches shall be verified. Brake action shall be tested in each direction. The proper time delay shall be verified between the actuation of the dual brakes.

3.7.6.2 Trolley Travel

The trolley shall be operated the full distance of the rails exercising all drive speed controls in each direction. Brake operation shall be verified in each direction. In slow speed the trolley bumpers shall contact the trolley stops located on the girders.

3.7.6.3 Bridge Travel

The bridge shall be operated the full distance of the runway exercising all drive speed controls, in each direction. Brake operation shall be verified in each direction. In slow speed, the crane bridge bumpers shall contact the runway rail stops.

3.7.6.4 Hoist Loss of Power No-Load Test

While slowly lowering the hook, the main power source shall be disconnected verifying that the hook will not lower and that the brake will set. The test shall be repeated for the hoist reduced speed drive controls.

3.7.6.5 Travel Loss of Power No-Load Test

With the hook raised to clear obstructions and the trolley traveling in slow speed, the main power source shall be disconnected verifying that the trolley will stop and that the brake will set. The test shall be repeated for the bridge and trolley reduced speed drive controls.

3.7.6.6 No-Load Performance Tests

During the no-load test, a full set of readings shall be taken from the displays on the drive controllers and recorded for the lowest and the highest speed points for hoist and travel motion. Readings shall include voltage, current, frequency, and speed of each motor. Two sets of readings shall be taken, one for normal speeds and one for reduced speeds. Hoist and travel speeds shall be computed based on motor speed and plotted against load for all speed points. The test conditions are as follows:

a. Main Hoists. Each main hoist shall be tested at the lowest and highest speed points both raising and lowering.

b. Auxiliary Hoist. Each auxiliary hoist shall be tested at the lowest and highest speed points both raising and lowering.

c. Bridge/Gantry Travel. The bridge travel shall be tested at the lowest and highest speed points in both directions of travel at no-load.

d. Trolley Travel. Each trolley travel shall be tested at the lowest and highest speed points in both directions of travel at no-load.

3.7.7 Hoist Static Load Test

Holding brakes and hoisting components shall be tested by manually releasing one of the holding brakes. The first holding brake shall be reapplied and the second holding brake released. Any lowering that may occur indicates a malfunction of the brakes or lowering components. The load test shall be 100% of the hoist capacity.

3.7.8 Hoist Loss of Power Test

While slowly lowering the test load, the emergency pushbutton shall be pressed verifying that the rated load will not lower and that both brakes will set.

3.7.9 Performance Tests

During the test for each condition specified a full set of readings shall be taken from the displays on the drive controllers and recorded for each speed point for hoist and travel motion. Readings shall include voltage, current, frequency, and speed of each motor. Two sets of readings shall be taken, one for normal speeds and one for reduced speeds. Hoist and travel speeds shall be computed based on motor speed and plotted against load for all speed points. Positioning accuracy shall be determined by measuring the rotation of the hoist drums and travel distances. The test conditions are as follows:

a. Main Hoists: Each main hoist shall be tested at all five speed points both raising and lowering. The test shall be run at rated load.

b. Auxiliary Hoists: Each auxiliary hoist shall be tested at all five speed points both raising and lowering. The test shall be run at rated load.

c. Bridge Travel: The bridge travel shall be tested at the first 2 speed points in both directions of travel at rated load.

d. Trolley Travel: Each trolley travel shall be tested at the first 2 speed points in both directions of travel at rated load.

After these tests all motors, brakes, gearing, and other mechanical or electrical equipment shall be thoroughly examined to assure no damage has occurred.

3.7.10 Load Tests

Unless otherwise indicated, the following tests shall be performed using a test load of 125 percent of rated load.

a. Dynamic Load Test: The test load shall be raised and lowered at least two feet, operating at the lowest speed point. The machinery shall be completely stopped at least once in each direction to ensure proper brake operation.

b. Trolley Dynamic Load Test: While operating the trolley with the load on the hook, the proper functioning of the lowest speed point and proper brake action shall be verified. Trolley travel shall be at least ten feet.

c. Bridge Dynamic Load Test: While operating the bridge with the load on the hooks, the proper functioning of the lowest speed point and brake action shall be verified. Bridge travel shall be at least twenty feet.

3.7.11 Additional Test Requirements

Tests shall be made by and at the expense of the Contractor and witnessed by the GQAR. If defects, such as misalignment, improper adjustment, overheating, or other defects become apparent which tend to damage the crane, nullify the test results, the tests shall be discontinued until proper action has been taken to correct the

conditions. After corrective action has been taken, the tests shall be continued or rerun as directed.

3.8 OPERATING INSTRUCTIONS

Condensed operating instructions explaining preventive maintenance procedures, methods of checking the system for normal safe operation, and procedures for safely starting and stopping the crane shall be prepared in typed form, bound in a binder and placed in the operator’s cab.

3.9 MANUFACTURER'S SERVICES

Services of a manufacturer's representative who is experienced in the installation, adjustment, erection and operation of the equipment specified shall be provided. The representative shall supervise the installation, adjustment, and testing of the equipment.

3.10 FIELD TRAINING

3.10.1 General Operation and Maintenance

A field training course shall be provided for designated operating staff members. Training shall be provided for a total period of four (4) hours of normal working time and shall start after the crane has passed the final acceptance test. Field training shall cover all of the items contained in the operating and maintenance instructions. The Contracting Officer shall be given at least 2 weeks advance notice of such training.

3.10.2 Solid State Maintenance Training

The Contractor shall have the electrical control equipment supplier provide a minimum of four (4) hour training session on the equipment. The training shall take place at the project site and shall include both lecture and hands on type of work. Instructor shall demonstrate how to diagnose various types of equipment failure.

END OF SECTION 01600

SECTION 01785

AS-BUILT DRAWINGS

Section Table of Contents

Para. No.	Paragraph Title
PART 1	**GENERAL**
1.1	SUBMITTALS
1.2	PROJECT RECORD DOCUMENTS
PART 2	**PRODUCTS (Not Used)**
PART 3	**EXECUTION (Not Used)**

SECTION 01785

AS-BUILT DRAWINGS

PART 1 GENERAL

1.1 SUBMITTALS

Government approval is required for submittals with a "GA" designation; submittals having an "FIO" designation are for information only. The following shall be submitted in accordance with Section 01330 SUBMITTAL PROCEDURES.

1.1.1 As-Built Drawings; [GA]

Drawings showing final as-built conditions of the project shall be submitted. The final CADD as-built drawings shall consist of one set of electronic CADD drawing files in the specified format.

1.2 PROJECT RECORD DOCUMENTS

1.2.1 As-Built Drawings

This paragraph covers as-built drawings complete, as a requirement of the contract. The terms "drawings," "contract drawings," "drawing files," "working as-built drawings" and "final as-built drawings" refer to contract drawings which are revised to be used for final as-built drawings.

1.2.1.1 Government Furnished Materials

One set of electronic CADD files in the specified software and format revised to reflect all bid amendments will be provided by the Government at the preconstruction conference.

1.2.1.2 Working As-Built and Final As-Built Drawings

The Contractor shall revise 1 sets of paper drawings by red-line process to show the as-built conditions during the prosecution of the project. These working as-built marked drawings shall be kept current on a weekly basis and shall be available on the jobsite at all times. Changes from the contract plans which are made in the work or additional information which might be uncovered in the course of construction shall be accurately and neatly recorded as they occur by means of details and notes. Final as-built drawings shall be prepared after the completion of each definable feature of work as listed in the Contractor Quality Control Plan (Foundations, Utilities, Structural Steel, etc., as appropriate for the project). The working as-built marked prints and final as-built drawings will be jointly reviewed for accuracy and completeness by the Contracting Officer and the Contractor prior to submission of each monthly pay estimate. If the Contractor fails to maintain the working and final as-built drawings as specified herein, the Contracting Officer will deduct from the monthly progress payment an amount representing the estimated cost of maintaining the as-built drawings. This monthly deduction will continue until an agreement can be reached between the Contracting Officer and the Contractor regarding the accuracy and completeness of updated drawings. The working

and final as-built drawings shall show, but shall not be limited to, the following information:

a. The actual location, kinds and sizes of all sub-surface utility lines. In order that the location of these lines and appurtenances may be determined in the event the surface openings or indicators become covered over or obscured, the as-built drawings shall show, by offset dimensions to two permanently fixed surface features, the end of each run including each change in direction. Valves, splice boxes and similar appurtenances shall be located by dimensioning along the utility run from a reference point. The average depth below the surface of each run shall also be recorded.

b. The location and dimensions of any changes within the building structure.

c. Correct grade, elevations, cross section, or alignment of roads, earthwork, structures or utilities if any changes were made from contract plans.

d. Changes in details of design or additional information obtained from working drawings specified to be prepared and/or furnished by the Contractor; including but not limited to fabrication, erection, installation plans and placing details, pipe sizes, insulation material, dimensions of equipment foundations, etc.

e. The topography, invert elevations and grades of drainage installed or affected as part of the project construction.

f. Changes or modifications which result from the final inspection.

g. Where contract drawings or specifications present options, only the option selected for construction shall be shown on the final as-built prints.

h. If borrow material for this project is from sources on Government property, or if Government property is used as a spoil area, the Contractor shall furnish a contour map of the final borrow pit/spoil area elevations.

i. Systems designed or enhanced by the Contractor, such as HVAC controls, fire alarm, fire sprinkler, and irrigation systems.

j. Modifications (change order price shall include the Contractor's cost to change working and final as-built drawings to reflect modifications) and compliance with the following procedures.

(1) Directions in the modification for posting descriptive changes shall be followed.

(2) A Modification Circle shall be placed at the location of each deletion.

(3) For new details or sections which are added to a drawing, a Modification Circle shall be placed by the detail or section title.

(4) For minor changes, a Modification Circle shall be placed by the area changed on the drawing (each location).

(5) For major changes to a drawing, a Modification Circle shall be placed by the title of the affected plan, section, or detail at each location.

(6) For changes to schedules or drawings, a Modification Circle shall be placed either by the schedule heading or by the change in the schedule.

(7) The Modification Circle size shall be 1/2 inch diameter unless the area where the circle is to be placed is crowded. Smaller size circle shall be used for crowded areas.

1.2.1.3 Drawing Preparation

The as-built drawings shall be modified as may be necessary to correctly show the features of the project as it has been constructed by bringing the contract set into agreement with approved working as-built prints, and adding such additional drawings as may be necessary. These working as-built marked prints shall be neat, legible and accurate. These drawings are part of the permanent records of this project and shall be returned to the Contracting Officer after approval by the Government. Any drawings damaged or lost by the Contractor shall be satisfactorily replaced by the Contractor at no expense to the Government.

Color code for changes shall be as follows:

(1) Deletions (red) - Deleted graphic items (lines) shall be colored red with red lettering in notes and leaders.

(2) Additions (Green) - Added items shall be drawn in green with green lettering in notes and leaders.

(3) Special (Blue) - Items requiring special information, coordination, or special detailing or detailing notes shall be in blue.

1.2.1.4 Computer Aided Design and Drafting (CADD) Drawings

Only personnel proficient in the preparation of CADD drawings shall be employed to modify the contract drawings or prepare additional new drawings. Additions and corrections to the contract drawings shall be equal in quality and detail to that of the originals. Line colors, line weights, lettering, layering conventions, and symbols shall be the same as the original line colors, line weights, lettering, layering conventions, and symbols. If additional drawings are required, they shall be prepared using the specified electronic file format applying the same graphic standards specified for original drawings. The title block and drawing border to be used for any new final as-built drawings shall be identical to that used on the contract drawings. Additions and corrections to the contract drawings shall be accomplished using CADD files. The Contractor will be furnished Microstation (.dgn) electronic vector files. The electronic files will be supplied on compact disc, read-only memory (CD-ROM). The Contractor shall be responsible for providing all program files and hardware necessary to prepare final as-built drawings. The Contracting Officer will review final as-built drawings for accuracy and the Contractor shall make required corrections, changes, additions, and deletions.

a. The Contract Drawing files shall be renamed in a manner related to the contract number (i.e., 98-C-10.DGN) as instructed in the Pre-Construction conference. Marked-up changes shall be made only to those renamed files. All changes shall be made on the layer/level as the original item. Special notes shall be on layer #63.

b. When final revisions have been completed, the cover sheet drawing shall show the wording "RECORD DRAWING AS-BUILT" followed by the name of the Contractor in letters at least 3/16 inch high. All other contract drawings shall be marked either "AS-Built" drawing denoting no revisions on the sheet or "Revised As-Built" denoting one or more revisions. Original contract drawings shall be dated in the revision block.

c. Within 20 days after Government approval of all of the working as-built drawings for a phase of work, the Contractor shall prepare the final CADD as-built drawings for that phase of work and submit two sets of blue-lined prints of these drawings for Government review and approval. The Government will promptly return one set of prints annotated with any necessary corrections. Within 10 days the Contractor shall revise the CADD files accordingly at no additional cost and submit one set of final prints for the completed phase of work to the Government. Within 20 days of substantial completion of all phases of work, the Contractor shall submit the final as-built drawing package for the entire project. The submittal shall consist of one set of Microstation (.dgn) electronic vector files on compact disc, read-only memory (CD-ROM), and one set of the approved working as-built drawings. They shall be complete in all details and identical in form and function to the contract drawing files supplied by the Government. Any transactions or adjustments necessary to accomplish this is the responsibility of the Contractor. The Government reserves the right to reject any drawing files it deems incompatible with the customer's CADD system. Paper prints, drawing files and storage media submitted will become the property of the Government upon final approval. Failure to submit final as-built drawing files and marked prints as specified shall be cause for withholding any payment due the Contractor under this contract. Approval and acceptance of final as-built drawings shall be accomplished before final payment is made to the Contractor.

1.2.1.5 Payment

No separate payment will be made for as-built drawings required under this contract, and all costs accrued in connection with such drawings shall be considered a subsidiary obligation of the Contractor.

1.2.3 Final Approved Shop Drawings

The Contractor shall furnish final approved project shop drawings 30 days after transfer of the completed facility.

1.2.4 Construction Contract Specifications

The Contractor shall furnish final as-built construction contract specifications, including modifications thereto, 30 days after transfer of the completed facility.

PART 2 PRODUCTS (NOT USED)

PART 3 EXECUTION (NOT USED)

END OF SECTION 01785

SECTION 02080

ASBESTOS ABATEMENT WORK

PART 1 GENERAL

1.1 GENERAL INFORMATION
1.2 REFERENCES
1.3 DEFINITIONS
1.4 SUBMITTALS
1.5 PROTECTION OF ADJACENT WORK
1.6 TITLE TO MATERIALS
1.7 SITE SECURITY
1.8 TRAINING
1.9 RESPIRATORY PROTECTION
1.10 MEDICAL EXAMINATIONS
1.11 INSURANCE
1.12 PERMITS AND NOTIFICATIONS
1.13 INDUSTRIAL HYGIENIST
1.14 AIR MONITORING PERSONNEL
1.15 PROJECT DOCUMENTATION

PART 2 PRODUCTS

2.1 MATERIALS

PART 3 EXECUTION

3.1 ABATEMENT WORK DESCRIPTION
3.2 BULK SAMPLING FOR ASBESTOS-CONTAINING MATERIAL
3.3 WARNING SIGNS & LABELS
3.4 WORK PROCEDURE
3.5 COMMENCEMENT OF WORK
3.6 PERSONNEL AND AREA AIR MONITORING
3.7 SITE INSPECTION
3.8 DISPOSAL OF ASBESTOS CONTAINING MATERIALS
3.9 WASTE SHIPMENT RECORD

SECTION 02080

ASBESTOS ABATEMENT WORK

PART 1 GENERAL

1.1 GENERAL INFORMATION

This section covers the removal and disposal of all asbestos-containing materials encountered during the execution of this contract. These materials may be found in, but are not limited to: the flooring material in the crane cab, electrical wiring insulation utilized throughout the bridge crane, brake pads, brake dust, and transite panels. This work includes the incidental procedures and equipment required to prevent the airborne release of, and protect workers and occupants of the buildings and/or areas from contact with, asbestos fibers. During the performance of the contract, the laws, ordinances, rules, and regulations of Federal, State, Regional, and local authorities shall be complied with regarding the removal, storage, transportation, and disposal of asbestos-containing materials. Where the requirements of these specifications and Federal, State, Regional or local regulations vary, the most stringent requirements shall be enforced.

1.2 REFERENCES

The publications listed below form a part of this specification as they apply to the requirements for asbestos abatement work. If referenced in this specification, the publications will be referred by basic designation only.

CODE OF FEDERAL REGULATIONS (CFR)

CFR 29 Part 1910	Occupational Safety and Health Standards
CFR 29 Part 1926	Safety and Health Regulations for Construction
CFR 40 Part 61	National Emissions Standards for Hazardous Air Pollutants
CFR 40 Part 241	Guidelines for the Land Disposal of Solid Waste
CFR 40 Part 763	Asbestos

ENVIRONMENTAL PROTECTION AGENCY (EPA)

EPA N560/5-85-024	(1985) Guidance for Controlling Asbestos Containing Materials in Buildings
EPA 340/1-90-018	(1990) Asbestos/NESHAP Regulated Asbestos Containing Materials Guidance
EPA 340/1-90-019	(1990) Asbestos/NESHAP Adequately Wet Guidance

NATIONAL INSTITUTE OF OCCUPATIONAL SAFETY AND HEALTH (NIOSH)

NIOSH-01	(1991) Manual of Analytical Methods

1.3 DEFINITIONS

Terms associated with removal and disposal are defined as follows:

1.3.1 Abatement.

Various processes used to control asbestos containing materials in buildings. There are three alternative methods of abatement: removal, encapsulation, or enclosure of asbestos.

1.3.2 Amended Water.

Water containing a wetting agent or surfactant.

1.3.3 Area Monitoring.

Sampling of asbestos fiber concentrations within the asbestos control area and outside the asbestos control area which is representative of the airborne concentrations of asbestos fibers which may reach the breathing zone.

1.3.4 Asbestos.

A class of magnesium-silicate minerals that occur in fibrous form. Minerals that are included in this group are chrysotile, crocidolite, amosite, anthophylite, tremolite, and actinolite.

1.3.5 Asbestos Containing Material (ACM).

A friable or non-friable material composed of asbestos of any type and in an amount greater than 1 percent by weight, either alone or mixed with other fibrous or nonfibrous materials.

1.3.6 Asbestos Control Area.

An area where asbestos abatement work is performed which is isolated by a containment barrier to prevent the spread of asbestos dust, fibers, or debris.

1.3.7 Asbestos Fibers.

Asbestos having an aspect ratio of at least 3 to 1 and are 5 micrometers or longer in length.

1.3.8 Asbestos Permissible Exposure Limit (PEL).

An 8-hour time weighted average of an airborne concentration of asbestos fibers equal to 0.1 fiber per cubic centimeter of air (0.1 f/cc).

1.3.9 Authorized Person.

A person authorized to be present in the regulated areas by either the Contractor, industrial hygienist, or the Contracting Officer.

1.3.10 Encapsulate.

The process whereby an encapsulant is applied to asbestos-containing materials (ACM) to control the release of asbestos fibers into the air.

1.3.11 Encapsulant.

A liquid material which can be applied to ACM which controls the possible release of asbestos fibers from the material either by creating

a membrane over the surface (bridging encapsulant) or by penetrating into the material and binding its components together (penetrating encapsulant).

1.3.12 Excursion Limit.

A 30 minute average of an airborne concentration of asbestos fibers equal to 1.0 fiber per cubic centimeter of air (1.0 f/cc).

1.3.13 Fiber Count.

The average number of asbestos fibers in a cubic centimeter (F/CC) of air.

1.3.14 Friable Asbestos Material.

Material that contains more than 1 percent asbestos by weight which when dry can be crumbled, pulverized, or reduced to powder by hand pressure.

1.3.15 Glovebag Technique.

A method for removing asbestos containing material from HVAC ducts, piping, valves, joints, elbows, and other nonplanar surfaces within a clear plastic containment bag. The glovebag is a premanufactured or custom fabricated bag, typically constructed of 6 mil transparent polyethylene material, that has at least two inward projecting long sleeves and gloves. The glovebag is constructed and installed in such a manner that it surrounds the object or material to be removed and contains all asbestos fibers released during the process. A portable exhaust system equipped with HEPA type filtration is used to maintain negative pressure within the glovebag enclosure relative to the pressure outside of it.

1.3.16 High-Efficiency Particulate Air (HEPA) Filter.

A filter capable of trapping and retaining at least 99.97 percent of all monodispersed particles of 0.3 microns in diameter or larger.

1.3.17 Negative Pressure System.

A system that has been designed to maintain a minimum pressure differential of at least minus 0.02 inches of water column in the asbestos control area relative to adjacent, unsealed areas outside of the asbestos control area.

1.3.18 Non-friable Asbestos Material.

Material that contains more than 1 percent asbestos by weight in which the fibers have been locked in by a bonding agent, coating, binder, or other material so that the asbestos is bound and normally does not release fibers during any routine appropriate end-use, handling, storage, transportation, or processing. Non-friable asbestos containing material may release excessive asbestos fiber concentrations during controlled handling, abrading, sanding, drilling, cutting, machining, removal or demolition operations. Non-friable asbestos containing material is considered hazardous during abatement and disposal procedures that destroy the material's integrity.

1.3.19 Personal Monitoring.

Sampling of asbestos fiber concentrations within the breathing zone of an employee.

1.3.20 Phase Contrast Illumination Microscopy (PCM).

An analytical method for counting fibers using the sampling and analytical method specified in NIOSH method 7400, latest revision.

1.3.21 Prior Experience.

Experience required of the Contractor and Industrial Hygienist on asbestos projects of similar nature and scope to insure their capability of performing the asbestos removal in a satisfactory manner. Similarities shall be in areas related to material composition, project size, number of employees, and the engineering work practice and personal protection control required. A minimum of 2 years of such experience shall be mandatory for both the Contractor and the industrial hygienist.

1.3.22 Qualitative Fit Tests and checks.

A group of tests that can be easily performed to test the fit of a respirator face-piece to the wearer's face. Examples are the negative and positive pressure checks, the irritant smoke test, and the isoamyl acetate (banana oil) test.

1.3.23 Quantitative Fit Tests.

A group of tests that can be performed to quantitatively test the fit of a respirator face-piece to the wearer's face.

1.3.24 Regulated Area.

An area established to demarcate areas where the possibility of airborne concentrations of asbestos exceed or can reasonably be expected to exceed the permissible exposure limit.

1.3.25 Supervisory Personnel.

A person who supervises activities in the regulated area. The supervisory person is capable of identifying existing asbestos hazards in the work place and has the authority to take prompt corrective measures to eliminate them. Their duties include, as a minimum, the following: establishing the negative-pressure enclosure, ensuring its integrity, and controlling entry to and exit from the enclosure; supervising all employee exposure monitoring as required; ensuring that all employees working within such enclosure wear the appropriate personal protective equipment, are trained in the use of appropriate methods of exposure control, and use the hygiene facilities and decontamination procedures specified; and ensuring that engineering controls in use are in proper operating condition and are functioning. The supervisory person must have successfully attended an EPA or State approved comprehensive course on asbestos hazards and its proper methods of abatement.

1.3.26 Surfactant.

A wetting agent that reduces the surface tension of water. The three types are cationic, anionic, and non-ionic.

1.3.27 Time Weighted Average (TWA).

The TWA is an 8-hour time weighted average of airborne concentrations of asbestos fibers that have an aspect ratio of at least 3 to 1 and are 5 micrometers or longer per cubic centimeter of air.

1.3.28 Transmission Electron Microscope Analysis (TEMA).

A method for detecting and counting asbestos fibers using NIOSH method 7402. TEM analysis is typically used to confirm asbestos fiber concentrations as counted by Phase Contrast Illumination Microscopy analysis.

1.4 SUBMITTALS

Submittals required by this section of the Technical Specifications shall be for Government approval (GA) or for information only (FIO), and shall be submitted as stated below in accordance with SECTION 01330. The time of submittal shall be in accordance with SECTION 01330, unless otherwise indicated below:

a. Initial Submittals.

Prior to the commencement of any work involving asbestos containing materials:

(1) Manufacturer's Data. (GA) The manufacturer's data, certificates of compliance, and any material safety data sheets (MSDS) for the following items:

(a) Surfactants.

(b) Encapsulants.

(c) Respirators.

(d) Vacuum equipment.

(e) Local exhaust equipment.

(f) Pressure differential equipment.

(i) Air monitoring equipment

(2) Sampling Plan. (GA) This plan shall include a description of the methods to be used to determine the magnitude and characteristics of asbestos removal work.

(3) Bulk Sampling Results, (FIO) The results of all bulk samples for suspected ACM. Bulk sampling shall conform to the requirement of Paragraph 3.2.

(4) Asbestos Plan. (GA) A detailed asbestos plan, approved and signed by the certified Industrial Hygienist, of the containment and work procedures to be used in the removal and demolition of asbestos containing materials. The plan shall include a sketch showing the location, size, and details of the asbestos control areas, location, layout, and details of the decontamination areas, and the locations of negative pressure equipment and pressure differential monitoring devices. The plan shall also include interface of trades involved in the construction, sequencing of asbestos-related work, disposal plan, type of wetting agent to be used, air monitoring, respirators, protective equipment, pressure differential monitoring device, and a detailed description of the method to be employed in order to control pollution. Prior to the start of any abatement work, the Contractor and the certified Industrial Hygienist shall meet with the Government to discuss in detail the asbestos plan including work procedures and safety precautions.

(5) Testing Laboratory and Air Monitoring Personnel. (GA) The name, address, and telephone number of the testing laboratory selected to perform the monitoring, testing, and reporting of airborne concentrations of asbestos fibers. Certification shall also be submitted to verify that the persons counting the samples have met the requirements as set forth in paragraph 1.14.

(6) Industrial Hygienist. (GA) The name, address, and telephone number of the industrial hygienist selected to approve the asbestos plan and direct monitoring. In addition, a copy of certification from the American Board of Industrial Hygiene for the Industrial Hygienist shall also be submitted.

(7) Training. (FIO) Certificates of training verifying that each employee has successfully passed an EPA or State certified asbestos worker course and has a current asbestos worker identification card. Certificates indicating the successful completion of an EPA or State approved "Asbestos Abatement Supervisory Personnel" course shall be submitted for those persons to be so designated for this abatement project.

(8) Medical Examination. (FIO) A certificate of compliance that includes the name, date of the most current medical examination, and the name and signature of the examining physician for all employees who have the potential to be exposed to airborne asbestos fibers in performing their assigned work.

(9) Respirator Fit Test Results. (FIO) A record of the most recent respirator fit test for each employee required to wear a respirator during the performance of their work. The respirator fit test results shall include as a minimum the following information:

(a) Type of respirator fit test used and agent.

(b) Specific make, model, size, and approval number of the respirator tested.

(c) Name of the person tested.

(d) Name of the test operator.

(e) Date of the test.

(f) Results of the respirator fit test.

(10) Permits and Notification. (FIO) A copy of all permits and notifications as required by Federal, State, and local agencies.

(11) Waste Disposal Site (WDS). (FIO) Prior to disposal, written evidence stating that the landfill for disposal is approved for asbestos disposal by the State and local regulatory agencies.

(12) Insurance. (FIO) A certificate of compliance that includes the insurance company's name, agent, type of coverage, amount of coverage, policy number, and effective dates.

(13) Previous Citations. (FIO) A list of any citation and their resulting penalties issued by Federal, State, or Local regulatory agencies relating to asbestos abatement activities. This list shall include the name of the project, dates, and resolutions. In addition, a list of any asbestos related contract that has been terminated prior to its completion shall also be submitted. This list shall include the project's name, date, and reasons for termination.

b. Subsequent Submittals.

(1) Work Site Entry Logbook. (FIO) A copy of the work site entry logbook daily for the previous work day. The entries in the log shall be consistent with the requirements set forth in paragraph 1.7.

(2) Daily Narrative Log. (FIO) A copy of the daily narrative log daily for the previous work day. The entries in the log shall be consistent with the requirements set forth in paragraph 1.15.

(3) Pressure Differential Recordings. (FIO) If required by the approved abatement plan, pressure differential recordings of the negative pressure system for each workday reviewed by the industrial hygienist, or designee, submitted on site within 24 hours from the end of each workday.

(4) Air Monitoring Results. (FIO) Fiber counting shall be completed and results reviewed by the industrial hygienist, or their designee, within 1 hour of the time the samples were taken. Monitoring results, signed by the testing laboratory employee performing the air monitoring, and the employee that analyzed the sample shall be submitted on site within 3 working days.

(5) Waste Shipment Record (WSR). (FIO) A copy of the completed WSR within 10 days after the transport of any asbestos containing materials to a Waste Disposal Site and before the completion date of this contract.

1.5 PROTECTION OF ADJACENT WORK AREAS

All asbestos removal shall be performed without contamination of adjacent work areas. Where such work contaminates adjacent work areas, these areas shall be decontaminated.

1.6 TITLE TO MATERIALS

Asbestos containing materials resulting from the abatement work will remain the property of the Government and shall be disposed of as specified herein.

1.7 SITE SECURITY

1.7.1 Authorized Personnel

During abatement work, the regulated area shall be restricted to only authorized, trained, and protected personnel. These personnel may include the Contractor's employees, the Government authorized representatives, State and local inspectors, and any other designated individuals. A list of authorized personnel shall be established prior to the initiation of work and the Contractor shall be responsible for site security during the abatement work.

1.7.2 Work Site Entry Log

A work site entry logbook shall be kept with the list of the names of all workers and visitors including the date and time of entry and departure that enter the asbestos control area.

1.8 TRAINING

1.8.1 Asbestos Abatement Workers

All personnel who are exposed to, or might reasonably be expected to be exposed to, airborne concentrations of asbestos at or above the permissible exposure limit, are required to have successfully completed an Environmental Protection Agency approved or State accredited asbestos abatement workers course. Successful completion of the course shall be prior to the time of initial assignment and an annual refresher course thereafter.

1.8.2 Supervisory Person

Personnel to be designated as "Supervisory Persons" for this abatement project shall have successfully completed an Environmental Protection Agency approved or State accredited Contractor/supervisor 40-hour course. Successful completion of the course shall be prior to the time of initial assignment and an annual refresher course is required thereafter.

1.9 RESPIRATORY PROTECTION

1.9.1 General

As a minimum, half-mask air-purifying respirators equipped with high-efficiency particulate air (HEPA) filters shall be used during all abatement work. Respirators providing greater protection for higher environmental concentrations of asbestos fibers shall be required, if their use is dictated by air sampling results. All respirators shall be jointly approved by the Mine Safety and Health Administration (MSHA) and the National Institute for Occupational Safety and Health (NIOSH). Each asbestos worker shall be provided with a personally issued and individually identified respirator.

1.9.2 Respirator Fit Testing

Each respirator issued to the worker shall be properly fitted. A qualitative respirator fit test shall be used to determine the ability of each worker to obtain a satisfactory fit. A respirator fit test shall be performed for each worker on initial fitting of the respirator and at least every 6 months thereafter. Fit test procedures shall be used as specified in 29 CFR 1926.58, Appendix C, "Qualitative and Quantitative Fit Testing Procedures".

1.9.3 Respirator Fit Checks

The workers shall be required to perform a positive and negative pressure fit check each time a respirator is worn.

1.10 MEDICAL EXAMINATIONS

As a minimum, a medical examination shall be given to each abatement worker on a annual basis. The content of the examination shall be consistent with the requirements set forth in 29 CFR 1926.58 (m)(2)(ii).

1.11 INSURANCE

In conjunction with SECTION I, Contract Clause "REQUIRED INSURANCE FOR WORK AT THE POWERHOUSE", a "per occurrence" insurance policy in the minimum amount of $2,000,000 shall be required to protect against any asbestos related claim that may arise out of or result from the Contractor's activities under this contract.

1.12 PERMITS AND NOTIFICATIONS

All permits relating to the asbestos removal, storage, hauling, and disposition, as required to perform the work described herein shall be the Contractor's responsibility. Timely notification of such actions as may be required by Federal, State, regional, and local agencies is the sole responsibility of the Contractor, including notification of the State's Environmental Protection Agency and the Contracting Officer in writing at least 10 working days prior to the commencement of work in accordance with 40 CFR 61.145 (b) and 40 CFR 2H.

1.13 INDUSTRIAL HYGIENIST

The industrial hygienist shall be certified by the American Board of Industrial Hygiene and have a minimum of 2 years of prior experience working on asbestos related projects. The project's Industrial Hygienist may be a professional engineer or certified safety professional with a minimum of 5 years experience in industrial hygiene, including 2 years of prior experience working on asbestos related projects. This individual shall not be affiliated in any way other than through this contract with the Contractor performing the abatement work.

1.14 AIR MONITORING PERSONNEL

Personnel performing air monitoring shall have, as a minimum, 1 year experience in the analysis of air samples and shall have successfully completed the NIOSH 582 course. In addition, within the past year the persons counting the samples shall have been judged proficient by their successful participation in the National Institute for Occupational Safety and Health (NIOSH) Proficiency Analytical Testing (PAT) Program. In lieu of this requirement, the individual performing the monitoring, testing and reporting shall participate and be listed on the Asbestos Analysis Registry. The laboratory that employs the air monitoring personnel shall be currently accredited by the National Institute for Standards and Technology (NIST) under the National Voluntary Laboratory Accreditation Program (NVLAP) for bulk asbestos analysis. Air monitoring personnel shall not be affiliated in any way other than through this contract with the Contractor performing the abatement work.

1.15 PROJECT DOCUMENTATION

Maintain and have available for inspection at the job site, the following:

a. Daily Narrative Log.

A daily narrative log kept by the industrial hygienist or his designee shall be maintained. This log shall document the major events which occur each day. This log shall provide a comprehensive description of conditions in and around the job site. It shall include the names of all persons who visit the job site and all persons who enter the sealed or restricted work areas. It shall contain the details of all accidents, emergencies, breakdowns of equipment, and any material, procedural or safety difficulties including issues and complaints brought to management attention by the Contractor's employees. It shall contain details such as the number of persons on the job, the time they entered the work area and the time they left, and the nature of the work-in-progress. Each day's entries shall be signed and dated by the person who made them.

b. Personnel and Area Air Monitoring Log.

A daily air monitoring log which records all required items outlined in paragraph 3.6.

PART 2 PRODUCTS

2.1 MATERIALS

2.1.1 General

Deliver all the materials in their original packages, containers, or bundles bearing the name of the manufacturer and where applicable, the brand name. Store all materials subject to damage off the ground, away from wet or damp surfaces, and under cover sufficient enough to protect them from damage or contamination. Replacement materials shall be stored outside of the work area until abatement is completed.

2.1.2 Polyethylene Sheeting

Polyethylene sheeting used for walls and floors shall have a minimum thickness of 6-mils. Polyethylene sheeting utilized for worker decontamination enclosures shall be opaque white or black in color. All polyethylene sheeting shall be used in widths selected to minimize the frequency of joints. Methods of attaching polyethylene sheeting to the building or structures in the building shall be submitted for approval. The method submitted shall be selected to minimize damage to equipment and surfaces; any resulting damage shall be the responsibility of the Contractor to repair at no additional cost to the Government.

2.1.3 Asbestos Disposal Bags

Disposal bags shall be of 6 mil polyethylene, pre-printed with labels as required in paragraph 3.3.

2.1.4 Disposal Drums

If used, disposal drums shall be metal or plastic with locking ring tops and shall be labeled as required in paragraph 3.3.

2.1.5 Encapsulant

The encapsulant shall be the bridging or penetrating type, depending on the particular application. The encapsulant shall not be solvent-based, utilize a vehicle consisting of hydrocarbons or be flammable. All encapsulants shall have been EPA approved prior to their application.

PART 3 EXECUTION

3.1 ABATEMENT WORK DESCRIPTION

The work includes the removal and disposal of all asbestos containing materials encountered during the execution of this contract. These materials may be found in, but are not limited to: the flooring material in the crane cab, electrical wiring insulation utilized throughout the bridge crane, brake pads, brake dust, and transite panels. With the exception of the crane cab flooring material, all suspect asbestos containing materials encountered during the execution of this contract shall be sampled in accordance with the requirements of Paragraph 3.2.

3.2 BULK SAMPLING FOR ASBESTOS-CONTAINING MATERIALS

Prior to the disturbance of any suspected ACM, the Contractor shall have representative samples of the material taken by an trained and certified

asbestos building inspector. The samples shall be taken in a manner that will not allow the release of airborne fibers and the sampling procedures shall be in compliance with all Federal and State requirements. The samples shall be transported to an approved testing laboratory for analysis of the material. Until sample results have been returned and reviewed by the GQAR, the Contractor shall handle all suspected materials as asbestos-containing. Bulk sampling results shall be submitted and shall include, as a minimum, the type of asbestos-containing material, approximate amount (percentage by weight), condition, and its location in the work area.

3.3 WARNING SIGNS AND LABELS

3.3.1 Warning Signs

Warning signs shall be posted at all approaches to any location where airborne concentrations of asbestos may be expected to exceed ambient background levels. Signs shall be posted at a distance sufficiently far enough away from the work area to permit an employee to read the sign and take the necessary protective measure to avoid exposure. Warning signs shall be provided that are of sufficient size to be clearly legible, printed on a contrasting background, and display the following legend:

DANGER
ASBESTOS
CANCER AND LUNG DISEASE HAZARD
AUTHORIZED PERSONNEL ONLY
RESPIRATORS AND PROTECTIVE
CLOTHING ARE REQUIRED
IN THIS AREA

3.3.2 Warning Labels

Warning labels shall be affixed on all containers that store asbestos waste materials. The warning label shall be legible, printed in large bold letters on a contrasting background, and display the following legend:

DANGER
CONTAINS ASBESTOS FIBERS
AVOID CREATING DUST
CANCER AND LUNG DISEASE HAZARD

3.4 WORK PROCEDURES

3.4.1 General

All asbestos abatement work shall be performed by certified asbestos abatement workers, under the direct supervision of the approved Contractor's supervisory personnel. Abatement work shall be performed as detailed in the approved asbestos abatement plan, unless alternative procedures have been submitted and approved. No abatement work shall proceed without a GQAR present to witness the work. The Contracting Officer shall be notified in writing at least seven days prior to each individual occurrence of abatement work. All asbestos work shall be performed in accordance with 29 CFR 1926.58, 40 CFR 241, state and local regulations and the requirements specified herein. Eating, smoking, drinking, chewing tobacco, or gum shall not be permitted in the regulated area. Personnel of other trades not engaged in the removal and disposal of asbestos containing materials shall not be in the regulated area.

3.4.2 Asbestos Waste

Asbestos waste shall be placed in approved containers, and caution labels applied on the containers in accordance with 20 CFR 1926.58 (k), (2), if not already preprinted on the containers. External surfaces of the filled containers shall be thoroughly cleaned by wet sponging prior to being transported out of the regulated areas. Bags shall not be overfilled and shall be securely sealed to prevent accidental opening and leakage by twisting and taping the tops of bags in a goose neck fashion. Bags shall be placed in drums for staging and transportation to the approved landfill. Asbestos containing waste with sharp-edged components, or which may puncture the disposal bags or plastic sheeting, shall be placed into approved disposal drums and sealed with locking ring tops.

3.5 COMMENCEMENT OF WORK

Commencement of abatement work shall not occur until:

a. All pre-abatement submittals, notifications, postings, and permits have been provided and approved.

b. All required enclosure systems (if used) have been constructed and tested.

c. Negative pressure systems (if used) are functioning properly.

d. All equipment for abatement, clean-up, and disposal are on-site.

e. The Contractor receives written permission to commence abatement.

3.6 PERSONNEL AND AREA AIR MONITORING

Monitoring of airborne concentrations of asbestos fibers shall be in accordance with 29 CFR 1926.58. All air monitoring shall be performed by the Industrial Hygienist, or their approved designee and shall include as a minimum, pre-abatement, personal, area, and post-abatement air samples as required by Federal, State, and local regulations. Analysis of the air samples shall be performed at the work site, unless otherwise approved. The Industrial Hygienist, or their designee, shall notify the Contractor, and the Government on site immediately of the results of any air sample that indicates airborne fiber concentrations in excess of the acceptable limits.

3.6.1 Pre-Abatement Air Sampling

Area air samples shall be taken for each asbestos removal site and the reference TWA established prior to the start of any abatement work. The number of general air samples required to be taken to establish the reference TWA for each abatement site shall be determined by the Industrial Hygienist and submitted for approval in the abatement plan.

3.6.2 Air Monitoring During Abatement Work

Personal and area air monitoring shall be provided and the TWA and excursion exposure levels shall be established during the first exposure to airborne concentrations of asbestos. Thereafter, provided the same type of work is performed, air monitoring shall be provided at a frequency as designated by the Industrial Hygienist. If monitoring outside the asbestos control area shows airborne concentrations have reached the action level, work shall be stopped and the Government on

site notified immediately. The condition(s) causing this increase shall be corrected prior to the continuance of any abatement work.

3.6.3 Post-Abatement Air Sampling

Area air samples shall be taken, under aggressive conditions, to establish the clearance TWA in the asbestos control area. A maximum TWA of less than 0.01 fibers/cc shall be established after final cleanup and before removal of the containment barrier. The fiber counts from these samples shall be less than 0.01 fibers/cc or less than or equal to the reference TWA whichever is less. Should any of the final samplings indicate a higher value, appropriate actions shall be taken by the Contractor to reclean the area and the area air sampling repeated.

3.7 SITE INSPECTION

While performing asbestos removal work, the Contractor shall be subject to on-site inspection. If the work is in violation of specification requirements or any Federal, State, or local regulations, a stop work order will be issued to be in effect immediately and until the violation is resolved. Standby time and expenses required to resolve the violation shall be at the Contractor's expense.

3.8 DISPOSAL OF ASBESTOS CONTAINING MATERIALS

Asbestos containing materials shall be disposed of by burial at a State-permitted sanitary landfill. The asbestos containing materials shall be hauled to the landfill in a closed container and all procedures for hauling and disposal shall comply with 40 CFR 61 Subpart M, 40 CFR 241 and 257, 49 CFR 171 and 172, and State, and local standards. ACM shall not be allowed to accumulate on site for more than 90 days.

3.9 WASTE SHIPMENT RECORD (WSR)

A WSR shall be completed and submitted for this contract as specified in CFR 40 Part 61, subpart M and other state waste manifest shipment records within 10 days of delivery to the landfill. The Government will Sign the manifests. `

*****

SECTION 02081

HAZARDOUS MATERIALS

TABLE OF CONTENTS

PART 1 GENERAL

1.1 GENERAL INFORMATION
1.2 REFERENCES
1.3 SUBMITTALS
1.4 DEFINITIONS

PART 2 PRODUCTS

(Not Used)

PART 3 EXECUTION

3.1 DISPOSITION OF HAZARDOUS WASTE

SECTION 02081

HAZARDOUS MATERIALS

PART 1 GENERAL

1.1 GENERAL INFORMATION

This Section covers general requirements and regulations for hazardous materials relating to site operations under this contract. The specific requirements of SECTION 01350 shall be in conjunction with this section in addition to other sections which may contain hazardous material requirements.

1.2 REFERENCES

The publications listed below form a part of this specification to the extent referenced. The publications are referred to in the text by the basic designation only.

CODE OF FEDERAL REGULATIONS (CFR)

40 CFR 261	Identification and Listing of Hazardous Waste
40 CFR 262	Generators of Hazardous Waste
40 CFR 263	Transporters of Hazardous Waste
40 CFR 264	Owners and Operators of Hazardous Waste Treatment, Storage, and Disposal Facilities
49 CFR 178	Shipping Container Specification

U.S. ARMY CORPS OF ENGINEERS PUBLICATIONS (USCE)

USCE EM 385-1-1	(2003) Safety and Health Requirements Manual

1.3 SUBMITTALS

Submittals required by this section of the Technical Specifications shall be for Government approval (GA) or for information only (FIO), and shall be submitted as stated below in accordance with SECTION 01330

SD-01 Data

Hazardous Waste Determinations; GA

Hazardous waste determinations, sample plans, sample results, disposal plans, disposal restrictions and shipping manifests, prior to shipment of any hazardous waste off site.

Shipping Manifest; FIO

Shipping manifest, signed by an authorized representative of the disposal facility, within 30 days after shipment from the Project, showing that the hazardous waste was accepted at the approved disposal facility.

Safe Storage Plan; GA

As part of the hazardous communication program a plan for safe storage of hazardous waste shall be submitted, as specified in para 3.1.3.

1.4 DEFINITIONS

1.4.1 Hazardous Materials

For the purpose of this contract a material will be considered hazardous if that material has any of the following characteristics: ignitability, corrosivity, reactivity, or toxicity in accordance with 40 CFR part 261, subpart C, "Characteristics of Hazardous Wastes.

PART 2 PRODUCTS

(NOT USED)

PART 3 EXECUTION

3.1 DISPOSITION OF HAZARDOUS WASTE

3.1.1 Hazardous Waste Generated by the Contractor

All hazardous waste generated by the Contractor shall become the property and responsibility of the Contractor. All hazardous waste disposal shall be in accordance with applicable Federal, State and Local regulations. The Contractor is required to provide all labor, equipment, materials and documentation for analysis, sampling, transportation and disposal of all hazardous waste streams, in accordance with 40 CFR part 260 through 272, generated during this contract. Hazardous waste shall not be allowed to accumulate on site for more than 90 days.

3.1.2 Other Hazardous Materials

If the Contractor discovers, or comes into contact with hazardous materials other than those identified in these specifications, the Contractor shall immediately notify the Government, and the Government will make a determination as to the course of action.

3.1.3 Hazardous Communication Program

A hazardous communication program shall be implemented, and Material Safety Data Sheets shall be used in accordance with EM 385-1-1 para. 0l.B.04. Prior to bringing any hazardous material or material that will generate a hazardous waste in excess of the reportable quantity as defined by Federal, State or Local laws, it shall be the Contractor’s responsibility to inform the Contracting Officers Representative in writing and submit for approval all plans for safe storage, labeling, use of emergency procedures and disposal.

******

SECTION 02120

TRANSPORTATION AND DISPOSAL OF HAZARDOUS MATERIALS

TABLE OF CONTENTS

PART 1 GENERAL

1.1 GENERAL INFORMATION
1.2 REFERENCES
1.3 SUBMITTALS
1.4 QUALIFICATIONS
1.5 LAWS AND REGULATIONS REQUIREMENTS
1.6 DEFINITIONS

PART 2 PRODUCTS

2.1 MATERIALS
2.2 EQUIPMENT AND TOOLS

PART 3 EXECUTION

3.1 ON-SITE HAZARDOUS WASTE MANAGEMENT
3.2 OFF-SITE HAZARDOUS WASTE MANAGEMENT
3.3 HAZARDOUS MATERIALS MANAGEMENT
3.4 OBTAINING EPA ID NUMBERS
3.5 SPECIAL REQUIREMENTS FOR ASBESTOS WASTES
3.6 WASTE MINIMIZATION
3.7 RECORDKEEPING
3.8 SPILL RESPONSE
3.9 EMERGENCY CONTACTS

ATTACHMENT A

SECTION 02120

TRANSPORTATION AND DISPOSAL OF HAZARDOUS MATERIALS

PART 1 GENERAL

1.1 GENERAL INFORMATION

It shall be assumed that existing paint contains lead. Existing Government test reports will be available at the Contractor's request. The Contractor shall test a sample from each area where paint is removed. Potential hazardous wastes to be generated by this work include lead-based paint and associated abrasive blasting material. See SECTION 09900 for health and safety requirements during paint removal procedures.

1.2 REFERENCES

The publications listed below form a part of this specification to the extent referenced. The publications are referred to in the text by basic designation only.

CODE OF FEDERAL REGULATIONS (CFR)

40 CFR 61	National Emission Standards for Hazardous Air Pollutants
40 CFR 261	Identification and Listing of Hazardous Waste
40 CFR 262	Standards Applicable to Generators of Hazardous Waste
40 CFR 263	Standards Applicable to Transporters of Hazardous Waste
40 CFR 264	Standards for Owners and Operators of Hazardous Waste Treatment, Storage, and Disposal Facilities
40 CFR 265	Interim Status Standards for Owners and Operators of Hazardous Waste Treatment, Storage, and Disposal Facilities
40 CFR 266	Standards for the Management of Specific Hazardous Wastes and Specific Types of Hazardous Waste Management Facilities
40 CFR 268	Land Disposal Restrictions
40 CFR 270	EPA Administered Permit Programs: The Hazardous Waste Permit Program
40 CFR 279	Standards for the Management of Used Oil
40 CFR 300	National Oil and Hazardous Substances Pollution Contingency Plan
40 CFR 302	Designation, Reportable Quantities, and Notification
49 CFR 107	Hazardous Materials Program Procedures

49 CFR 172	Hazardous Materials Table, Special Provisions, Hazardous Materials Communications, Emergency Response Information, and Training Requirements
49 CFR 173	Shippers - General Requirements for Shipments and Packaging
49 CFR 178	Specifications for Packaging

1.3 SUBMITTALS

Government approval is required for submittals with a "GA" designation; submittals having an "FIO" designation are for information only. The following shall be submitted in accordance with SECTION 01330.

SD-1 Data

On-site Hazardous Waste Management; GA

Off-site Hazardous Waste Management; GA

Prior to start of work, a plan detailing the manner in which hazardous wastes shall be managed.

SD-09 Reports

Record keeping; GA

Information necessary to file state annual or EPA biennial reports for all hazardous waste transported, treated, stored, or disposed of under this contract. The Contractor shall not forward these data directly to the regulatory agency but to the Contracting Officer at the specified time. The submittal shall contain all the information necessary for filing of the formal reports in the form and format required by the governing Federal or state regulatory agency. A cover letter shall accompany the data to include the contract number, Contractor name, and project location.

Spill Response; FIO

In the event of a spill or release of a hazardous substance (as designated in 40 CFR 302), or pollutant or contaminant, or oil (as governed by the Oil Pollution Act (OPA), 33 U.S.C. 2701 et seq.), the Contractor shall notify the Contracting Officer immediately. If the spill exceeds a reporting threshold, the Contractor shall follow the pre-established procedures for immediate reporting to the Contracting Officer.

Exception Reports; GA

In the event that a manifest copy documenting receipt of hazardous waste at the treatment, storage, and disposal facility is not received within 35 days of shipment initiation, the Contractor shall prepare and submit an exception report to the Contracting Officer within 37 days of shipment initiation.

SD-13 Certificates

Qualifications; FIO

Copies of the current certificates of registration issued to the Contractor and/or subcontractors or written statements certifying exemption from these requirements.

Off-Site Policy Compliance Certification; FIO

A letter certifying that EPA considers the facilities to be used for all off-site disposal to be acceptable in accordance with the Off-Site policy in 40 CFR 300, Section .440. This certification shall be provided for wastes from Resource Conservation and Recovery Act (RCRA), 42 U.S.C. 6901 et seq., sites as well as from Comprehensive Environmental Response Compensation and Liability Act (CERCLA), 42 U.S.C. 9601 et seq., responses. See Attachment A sample certification at the end of this section.

Certificates of Disposal; FIO

Certificates documenting the ultimate disposal of hazardous wastes within 180 days of initial shipment. Receipt of these certificates will be required for final payment.

Shipping Documents and Packagings Certification; GA

All transportation related shipping documents to the Contracting Officer, including draft hazardous waste manifests, draft land disposal restriction notifications, draft bill of loadings for hazardous materials, lists of corresponding proposed labels, packages, marks, and placards to be used for shipment, waste profiles, and supporting waste analysis documents, for review a minimum of 14 days prior to anticipated pickup. Packaging assurances shall be furnished prior to transporting hazardous material; "generator copies" of hazardous waste manifests, land disposal restriction notifications, "generator copies" of manifests used for initiating shipments of used oil invoices/shipment records, bill of loadings and supporting waste analysis documents shall be furnished when shipments are originated.

SD-18 Records

Notices of Non-Compliance and Notices of Violation; FIO

Notices of non-compliance or notices of violation by a Federal, state, or local regulatory agency issued to the Contractor in relation to any work performed under this contract. The Contractor shall immediately provide copies of such notices to the Contracting Officer. The Contractor shall also furnish all relevant documents regarding the incident and any information requested by the Contracting Officer, and shall coordinate its response to the notice with the Contracting Officer or his designated representative prior to submission to the notifying authority. The Contractor shall also furnish a copy to the Contracting Officer of all documents submitted to the regulatory authority, including the final reply to the notice, and all other materials, until the matter is resolved.

1.4 QUALIFICATIONS

1.4.1 Transportation and Disposal Coordinator

The Contractor shall designate, by position and title, one person to act as the Transportation and Disposal Coordinator (TDC) for this contract. The TDC shall serve as the single point of contact for all environmental regulatory matters and shall have overall responsibility for total environmental compliance at the site including but not limited to accurate identification and classification of hazardous waste and hazardous materials; determination of proper shipping names; identification of marking, labeling, packaging and placarding requirements; completion of waste profiles, hazardous waste manifests, asbestos waste shipment records, bill of loadings, exception and discrepancy reports; and all other environmental documentation. The TDC shall have, at a minimum, one year of specialized experience in the management and transportation of hazardous waste.

1.4.2 Training

The Contractor's employees transporting hazardous materials or preparing hazardous materials for transportation shall be trained, tested, and certified in accordance with 49 CFR 172.

1.4.3 Certification

The Contractor and/or subcontractors transporting hazardous materials shall possess a current certificate of registration issued by the Research and Special Programs Administration (RSPA), U.S. Department of Transportation, when required by 49 CFR 107, Subpart G.

1.5 LAWS AND REGULATIONS REQUIREMENTS

Work shall meet or exceed the minimum requirements established by Federal, state, and local laws and regulations which are applicable. These requirements are amended frequently and the Contractor shall be responsible for complying with amendments as they become effective. In the event that compliance exceeds the scope of work or conflicts with specific requirements of the contract, the Contractor shall notify the Contracting Officer immediately.

1.6 DEFINITIONS

a. Hazardous Material. A substance or material which has been determined by the Secretary of Transportation to be capable of posing an unreasonable risk to health, safety, and property when transported in commerce, and which has been so designated pursuant to the Hazardous Materials Transportation Act, 49 U.S.C. Appendix Section 1801 et seq. The term includes materials designated as hazardous materials under the provisions of 49 CFR 172, Sections .101 and .102 and materials which meet the defining criteria for hazard classes and divisions in 49 CFR 173. EPA designated hazardous wastes are also hazardous materials.

b. Hazardous Waste. A waste which meets criteria established in RCRA or specified by the EPA in 40 CFR 261 or which has been designated as hazardous by a RCRA authorized state program.

PART 2 PRODUCTS

2.1 MATERIALS

The Contractor shall provide all of the materials required for the packaging, labeling, marking, placarding and transportation of hazardous wastes and hazardous materials in conformance with Department of Transportation standards. Details in this specification shall not be construed as establishing the limits of the Contractor's responsibility.

2.1.1 Packagings

The Contractor shall provide non-bulk containers for packaging hazardous materials/wastes consistent with the authorizations referenced in the Hazardous Materials Table in 49 CFR 172, Section .101, Column 8. Bulk and non-bulk packaging shall meet the corresponding specifications in 49 CFR 173 referenced in the Hazardous Materials Table, 49 CFR 172, Section 101. Each packaging shall conform to the general packaging requirements of Subpart B of 49 CFR 173, to the requirements of 49 CFR 178 at the specified packing group performance level, to the requirements of special provisions of column 7 of the Hazardous Materials Table in 49 CFR 172, Section .101, and shall be compatible with the material to be packaged as required by 40 CFR 262. The Contractor shall also provide other packaging related materials such as materials used to cushion or fill voids in overpacked containers, etc. Sorbent materials shall not be capable of reacting dangerously with, being decomposed by, or being ignited by the hazardous materials being packaged. Additionally, sorbents used to treat free liquids to be disposed of in landfills shall be non-biodegradable as specified in 40 CFR 264, Section .314.

2.1.2 Markings

The Contractor shall provide markings for each hazardous material/waste package, freight container, and transport vehicle consistent with the requirements of 49 CFR 172, Subpart D and 40 CFR 262, Section .32 (for hazardous waste). Markings must be capable of withstanding, without deterioration or substantial color change, a 180 day exposure to conditions reasonably expected to be encountered during container storage and transportation.

2.1.3 Labeling

The Contractor shall provide primary and subsidiary labels for hazardous materials/wastes consistent with the requirements in the Hazardous Materials Table in 49 CFR 172, Section .101, Column 6. Labels shall meet design specifications required by 49 CFR 172, Subpart E including size, shape, color, printing, and symbol requirements. Labels shall be durable and weather resistant and capable of withstanding, without deterioration or substantial color change, a 180 day exposure to conditions reasonably expected to be encountered during container storage and transportation.

2.1.4 Placards

For each off-site shipment of hazardous material/waste, the Contractor shall provide primary and subsidiary placards consistent with the requirements of 49 CFR 172, Subpart F. Placards shall be provided for each side and each end of bulk packaging, freight containers, transport vehicles, and rail cars requiring such placarding. Placards may be plastic, metal, or other material capable of withstanding, without

deterioration, a 30 day exposure to open weather conditions and shall meet design requirements specified in 49 CFR 172, Subpart F.

2.1.5 Spill Response Materials

The Contractor shall provide spill response materials including, but not limited to, containers, adsorbent, shovels, and personal protective equipment. Spill response materials shall be available at all times in which hazardous materials/wastes are being handled or transported. Spill response materials shall be compatible with the type of material being handled.

2.2 EQUIPMENT AND TOOLS

The Contractor shall provide miscellaneous equipment and tools necessary to handle hazardous materials and hazardous wastes in a safe and environmentally sound manner.

PART 3 EXECUTION

3.1 ON-SITE HAZARDOUS WASTE MANAGEMENT

These paragraphs apply to Government owned waste only. Contractors are prohibited by 10 U.S.C. 2692 from storing contractor owned waste on site for any length of time. The Contractor shall be responsible for ensuring compliance with all Federal, state, and local hazardous waste laws and regulations and shall verify those requirements when preparing reports, waste shipment records, hazardous waste manifests, or other documents. The Contractor shall identify hazardous wastes using criteria set forth in 40 CFR 261 or all applicable state and local laws, regulations, and ordinances. When accumulating hazardous waste on-site, the Contractor shall comply with generator requirements in 40 CFR 262 and any applicable state or local law or regulations. On-site accumulation times shall be restricted to applicable time frames referenced in 40 CFR 262, Section .34 and any applicable state or local law or regulation. Accumulation start dates shall commence when waste is first generated (i.e. containerized or otherwise collected for discard). The Contractor shall only use containers in good condition and compatible with the waste to be stored. The Contractor shall be responsible for ensuring containers are closed except when adding or removing waste. The Contractor shall be responsible for immediately marking all hazardous waste containers with the words "hazardous waste" and other information required by 40 CFR 262, Section .32 and any applicable state or local law or regulation as soon as the waste is containerized. An additional marking shall be placed on containers of "unknowns" designating the date sampled, and the suspected hazard. The Contractor shall be responsible for inspecting containers for signs of deterioration and shall be responsible for responding to any spills or leaks. The Contractor shall inspect all hazardous waste areas weekly and shall provide written documentation of the inspection. Inspection logs will contain date and time of inspection, name of individual conducting the inspection, problems noted, and corrective actions taken.

3.1.1 Hazardous Waste Classification

The Contractor, in consultation with the Contracting Officer, shall identify all waste codes applicable to each hazardous waste stream based on requirements in 40 CFR 261 or any applicable state or local law or regulation. The Contractor shall also identify all applicable treatment standards in 40 CFR 268 and state land disposal restrictions and shall make a determination as to whether or not the waste meets or exceeds the

standards. Waste profiles, analyses, classification and treatment standards information shall be submitted to Contracting Officer for review and approval.

3.1.2 Management Plan

The Contractor shall prepare a plan detailing the manner in which hazardous wastes shall be managed and describing the types and volumes of hazardous wastes anticipated to be managed as well as the management practices to be utilized. The plan shall identify the method to be used to ensure accurate piece counts and/or weights of shipments; shall identify waste minimization methods; shall propose facilities to be utilized for treatment, storage, and/or disposal; shall identify areas on-site where hazardous wastes are to be handled; shall identify whether transfer facilities are to be utilized; and if so, how the wastes will be tracked to ultimate disposal.

3.2 OFF-SITE HAZARDOUS WASTE MANAGEMENT

The Contractor shall use RCRA Subtitle C permitted facilities which meet the requirements of 40 CFR 264 or facilities operating under interim status which meet the requirements of 40 CFR 265. Off-site treatment, storage, and/or disposal facilities with significant RCRA violations or compliance problems (such as facilities known to be releasing hazardous constituents into ground water, surface water, soil, or air) shall not be used.

3.2.1 Description of TSD Facility and Transporter

The Contractor shall provide the Contracting Officer with EPA ID numbers, names, locations, and telephone numbers of TSD facilities and transporters. This information shall be contained in the Hazardous Waste Management Plan for approval prior to waste disposal.

3.2.2 Status of the Facility

Facilities receiving hazardous waste must be permitted in accordance with 40 CFR 270 or operating under interim status in accordance with 40 CFR 265 requirements or must be permitted by an authorized state program. Additionally, prior to using a TSD Facility, the Contractor shall contact the EPA Regional Off-site Coordinator specified in 40 CFR 300, Section .440, to determine the facility's status and document all information necessary to satisfy the requirements of the EPA Off-Site policy and furnish this information to the Contracting Officer.

3.2.3 Packaging Certification

Prior to shipment of any hazardous material off-site, the Contractor's TDC shall provide written certification to the Contracting Officer that hazardous materials have been properly packaged, labeled, and marked in accordance with Department of Transportation and EPA requirements.

3.2.4 Transportation

The Contractor shall use manifests for transporting hazardous wastes as required by 40 CFR 263 or any applicable state or local law or regulation. Transportation shall comply with all requirements in the Department of Transportation referenced regulations in the 49 CFR series. The Contractor shall acquire manifests in accordance with the hierarchy established in 40 CFR 262, Section .21. The Contractor shall

prepare hazardous waste manifests for each shipment of hazardous waste shipped off-site. Manifests shall be completed using instructions in 40 CFR 262, Subpart B and any applicable state or local law or regulation. Manifests and waste profiles shall be submitted to Contracting Officer for review and approval. The Contractor shall prepare land disposal restriction notifications as required by 40 CFR 268 or any applicable state or local law or regulation for each shipment of hazardous waste. Notifications shall be submitted with the manifest to the Contracting Officer for review and approval.

3.2.5 Treatment and Disposal of Hazardous Wastes

The hazardous waste shall be transported to an approved hazardous waste treatment, storage, or disposal facility within 90 days of the accumulation start date on each container. The Contractor shall ship hazardous wastes only to facilities which are properly permitted to accept the hazardous waste or operating under interim status. The Contractor shall ensure wastes are treated to meet land disposal treatment standards in 40 CFR 268 prior to land disposal. The Contractor shall propose TSD facilities via submission of the Hazardous Waste Management Plan, subject to the approval of the Contracting Officer.

3.3 HAZARDOUS MATERIALS MANAGEMENT

The Contractor, in consultation with the Contracting Officer, shall evaluate prior to shipment of any material off-site whether the material is regulated as a hazardous waste in addition to being regulated as a hazardous material; this shall be done for the purpose of determining proper shipping descriptions, marking requirements, etcetera, as described below.

3.3.1 Identification of Proper Shipping Names

The Contractor shall use 49 CFR 172, Section .101 to identify proper shipping names for each hazardous material (including hazardous wastes) to be shipped off-site. Proper shipping names shall be submitted to the Contracting Officer in the form of draft shipping documents for review and approval.

3.3.2 Packaging, Labeling, and Marking

The Contractor shall package, label, and mark hazardous materials/wastes using the specified materials and in accordance with the referenced authorizations. The Contractor shall mark each container of hazardous waste of 110 gallons or less with the following:

"HAZARDOUS WASTE - Federal Law Prohibits Improper Disposal.
If found, contact the nearest police or public safety authority or the U.S. Environmental Protection Agency.
Generator's name _____
Manifest Document Number _____".

3.3.3 Shipping Documents

The Contractor shall ensure that each shipment of hazardous material sent off-site is accompanied by properly completed shipping documents. The Contractor shall prepare a bill of lading for each shipment of hazardous material which is not accompanied by a hazardous waste manifest which fulfills the shipping paper requirements. The bill of

lading shall satisfy the requirements of 49 CFR 172, Subpart C, and any applicable state or local law or regulation, and shall be submitted to the Contracting Officer for review and approval. For laboratory samples and treatability study samples, the Contractor shall prepare bills of lading and other documentation as necessary to satisfy conditions of the sample exclusions in 40 CFR 261, Section .4(d) and (e) and any applicable state or local law or regulation. Bill of ladings requiring shipper's certifications shall be signed by the Government.

3.4 OBTAINING EPA ID NUMBERS

The Contractor shall complete EPA Form 8700-12, Notification of Hazardous Waste Activity, and submit to the Contracting Officer for review and approval. The Contractor shall allow a minimum of 30 days for processing the application and assigning the EPA ID number. Shipment shall be made not earlier than one week after receipt of the EPA ID number.

3.5 SPECIAL REQUIREMENTS FOR ASBESTOS WASTES

If work involves asbestos containing wastes, the Contractor shall manage these wastes in accordance with specification Section 02080 ASBESTOS ABATEMENT.

3.6 WASTE MINIMIZATION

The Contractor shall minimize the generation of hazardous waste to the maximum extent practicable. The Contractor shall take all necessary precautions to avoid mixing clean and contaminated wastes. The Contractor shall identify and evaluate recycling and reclamation options as alternatives to land disposal. Requirements of 40 CFR 266 shall apply to: hazardous wastes recycled in a manner constituting disposal; hazardous waste burned for energy recovery; lead-acid battery recycling; and hazardous wastes with economically recoverable precious metals.

3.7 RECORDKEEPING

The Contractor shall be responsible for maintaining adequate records to support information provided to the Contracting Officer regarding exception reports, annual reports, and biennial reports. The Contractor shall be responsible for maintaining asbestos waste shipment records for a minimum of 3 years from the date of shipment or any longer period required by any applicable law or regulation or any other provision of this contract.

3.8 SPILL RESPONSE

The Contractor shall respond to any spill of hazardous materials or hazardous waste which are in the custody or care of the Contractor pursuant to this contract. Any direction from the Contracting Officer concerning a spill or release shall not be considered a change under the contract. The Contractor shall comply with all applicable requirements of Federal, state, or local laws or regulations regarding any spill incident.

3.9 EMERGENCY CONTACTS

The Contractor shall be responsible for complying with the emergency contact provisions in 49 CFR 172, Section .604. Whenever the Contractor ships hazardous materials, the Contractor shall provide a 24-hr

emergency response contact and phone number of a person knowledgeable about the hazardous materials being shipped and who has comprehensive emergency response and incident mitigation information for that material, or has immediate access to a person who possesses such knowledge and information. The phone must be monitored on a 24-hour basis at all times when the hazardous materials are in transportation including during storage incidental to transportation. The Contractor shall ensure that information regarding this emergency contact and phone number are placed on all hazardous materials shipping documents. The Contractor shall designate an emergency coordinator and post the following information at areas in which hazardous wastes are managed:

a. The name of the emergency coordinator.

b. Phone number through which the emergency coordinator can be contacted on a 24 hour basis.

c. The telephone number of the local fire department.

d. The location of fire extinguishers and spill control materials.

END OF SECTION 02120

Attachment A

SAMPLE OFF-SITE POLICY CERTIFICATION MEMO

Project/Contract #:_____
Waste Stream:_____
Primary TSD Facility, EPA ID # and Location: _____
Alter. TSD Facility, EPA ID # and Location:_____

EPA Region	Primary Contact	Secondary Contact
I	(617) 573-5755	(617) 573-1754
II	(212) 264-9504	(212) 264-2638
III	(215) 597-1857	(215) 597-8338
IV	(404) 347-7603	(404) 347-7603
V	(312) 353-7921	(312) 886-4445
VI	(214) 655-2282	(214) 655-2281
VII	(913) 551-7816	(913) 551-7667
VIII	(303) 293-1823	(303) 293-1506
IX	(415) 744-2129	(415) 744-2114
X	(206) 553-6646	(206) 553-1061

EPA representative contacted: _____
EPA representative phone number: _____
Date contacted: _____
Comment: _____

The above EPA representative was contacted on _____. As of that date the above sites were considered acceptable in accordance with the Off-Site Policy in 40 CFR 300.440.

Signature: _____ Date: _____
Phone number: _____

SECTION 05101

METALWORK FABRICATION, MACHINE WORK, AND MISCELLANEOUS PROVISIONS

TABLE OF CONTENTS

PART 1 GENERAL

1.1 GENERAL INFORMATION
1.2 REFERENCES
1.3 SUBMITTALS
1.4 INSPECTION AND TESTS

PART 2 PRODUCTS

(NOT USED)

PART 3 EXECUTION

3.1 STRUCTURAL FABRICATION
3.2 WELDING
3.3 MACHINE WORK
3.4 ZINC COATINGS
3.5 SHOP INSPECTION
3.6 PROTECTION OF MACHINE SURFACES
3.7 BOLTED CONNECTIONS
3.8 SET SCREWS
3.9 SPECIAL NONDESTRUCTIVE TESTING

SECTION 05101

METALWORK FABRICATION, MACHINE WORK, AND MISCELLANEOUS PROVISIONS

PART 1 GENERAL

1.1 GENERAL INFORMATION

This section covers general workmanship requirements, applicable to the fabrication and inspection of various items of metalwork and machine work. These requirements are in addition to those contained in the specification sections covering the specific items of work or as shown.

1.2 REFERENCES

The publications listed below form a part of this specification to the extent referenced. The publications are referred to in the text by basic designation only.

AMERICAN NATIONAL STANDARD INSTITUTE (ANSI)

ANSI B4.1	(1999) Preferred Limits and Fits for Cylindrical Parts
ANSI B46.1	(1995) Surface Texture (Surface Roughness, Waviness and Lay)

AMERICAN SOCIETY FOR NONDESTRUCTIVE TESTING (ASNT)

ASNT SNT-TC-1A	(2001) Recommended Practice, Personnel Qualifications and Certification in Nondestructive Testing

AMERICAN SOCIETY OF MECHANICAL ENGINEERS (ASME)

ASME Section IX	Qualification Standard for Welding and Brazing Welders, Brazers, and Welding and Brazing Operators

AMERICAN SOCIETY FOR TESTING AND MATERIALS (ASTM)

ASTM A 123	(2001; Rev A) Zinc (Hot Dipped Galvanized) Coatings on Iron and Steel Products
ASTM A 780	(2001; Rev A) Repair of Damaged and Uncoated Areas of Hot Dipped Galvanized Coatings.

AMERICAN WELDING SOCIETY, INC. (AWS)

AWS D1.1	(2002) Structural Welding Code-Steel
AWS QC1	(1996) Standard for AWS Certification of Welding Inspectors Fourteenth Edition

1.3 SUBMITTALS

Government approval is required for all submittals with a "GA" designation; submittals having an "FIO" designation are for information only. The following shall be submitted in accordance with SECTION 01330.

SD-04 Drawings

Shop Drawings; GA

Shop drawings including catalog cuts, templates, fabrication and assembly details and type, grade and class of materials as appropriate. A list shall be furnished designating the material to be used for each item. The shop drawings shall be complete and show all material machining

allowances and other details that the shop personnel require to fabricate the items. The Contractor is responsible for checking the fit and dimensions shown on the plans prior to fabrication and machining of the parts. Information or elements of fabricated items omitted on the contract drawings but necessary for shop fabrication shall be detailed and indicated on the shop drawings.

SD-07 Schedules

Schedule of Welding Procedures; GA

a. Three copies of the complete schedules of welding procedures as described in paragraph 3.2.4.1 and other required procedures.

b. Welder Qualifications. See paragraph 3.2.3.

c. Inspection Agency Qualifications. See paragraph 3.2.6.2.3.

d. Weld repair plan. See paragraph 3.2.6.2.6.

1.4 INSPECTIONS AND TESTS

1.4.1 Inspections and Tests

Inspections and tests shall be performed in accordance with this section and in conjunction with SECTION 01451, “Quality Control” of these specifications, to demonstrate that the fabrication and machine work are in conformity and in addition to the applicable inspection requirements elsewhere specified. A detailed plan shall be prepared as part of the CQC Plan to record all measurements, and other details that indicate the plans and specifications are met. These tests and inspections shall be performed at the Contractor's expense, certified, and available for review. Inspections and tests shall conform to the requirements of the particular sections of these specifications and plans for the respective items of work unless otherwise specified or authorized. The Government will notify the Contractor which inspections and tests shall be conducted in the presence of and witnessed by the GQAR. The Government shall be notified of the dates of the inspections and tests as required in SECTION 01451.

1.4.2 Structural Weldments

1.4.2.1 General

Inspection shall be made of each weldment to show that the completed unit meets all the details shown or specified. Records shall be kept of each inspection.

1.4.2.2 Non-destructive Inspection

When doubt exists as to the soundness of any weldment, such weldment shall be subjected to any form of non-destructive inspection as directed. This may include ultrasonic, magnaflux, dye penetrant, x-ray, gamma ray or any other test that will thoroughly inspect the weldment in question. The cost of such inspection will be borne by the Government only if the weldment is determined to meet the specifications. The cost of the inspection for weldments found unsound shall be borne by the Contractor. Any unsound weldments will be rejected and shall be replaced and re-inspected at the Contractor's expense.

1.4.2.3 Destructive Inspection

When doubt exists as to the soundness of any weldment that cannot be resolved by non-destructive inspection, coupons shall be taken for

destructive inspection as directed. The cost of such inspection, repair, or replacement will be borne by the Government only if the weldment is determined to meet the specifications. The cost of the inspection for weldments found unsound shall be borne by the Contractor. Any unsound weldments will be cause for rejection and rejected weldments shall be repaired or replaced and re-inspected at the Contractor's expense.

PART 2 PRODUCTS

(Not Used)

PART 3 EXECUTION

3.1 STRUCTURAL FABRICATION

3.1.1 General

Material must be straight before being laid off or worked. If straightening is necessary it shall be done by methods that will not impair the metal. Sharp kinks or bends shall be cause for rejection of the material. Material with welds will not be accepted except where welding is definitely specified, indicated on the drawings or otherwise approved. Bends shall be made by dies, press brakes or bending rolls normally used in this type of fabrication. Where heating is required, precautions shall be taken to avoid overheating the metal and it shall be allowed to cool in a manner that will restore the original properties of the metal. Proposed flame cutting of material other than structural steel shall be subject to approval and shall be indicated on shop drawings. Shearing shall be accurate and all portions of the work shall be neatly finished. Corners shall be square and true unless otherwise shown. Re-entrant cuts shall be filleted to a minimum radius of 3/4-inch unless otherwise approved. Finished members shall be free of twists, bends and open joints.

3.1.2 Dimensional Tolerances for Structural Work

Dimensions shall be measured by an approved calibrated steel tape of approximately the same temperature as the material being measured at the time of measurement. The overall dimensions of an assembled structural unit shall be within the tolerances shown or as specified in the particular section of these specifications for the item of work. Where tolerances are not specified in other sections of these specifications or shown an allowable variation of 1/32-inch is permissible in the overall length of component members with both ends milled, and component members without milled ends shall not deviate from the dimensions shown by more than 1/16-inch for members 30 feet or less in length and by more than 1/8-inch for members over 30 feet in length.

3.1.3 Structural Steel Fabrication

Structural steel may be cut by mechanically guided or hand guided torches provided an accurate profile with a surface that is smooth and free from cracks and notches is obtained. Surfaces and edges to be welded shall be prepared in accordance with AWS D1.1, Subsection 3.2. Where structural steel is not to be welded and is not exposed to view, grinding will not be required except as necessary to remove slag and sharp edges of mechanically guided or hand guided cuts. Hand or mechanically guided cuts which are to be exposed or visible shall be chipped, ground or machined to sound metal. All exposed edges shall be ground to provide a radius, approximately 1/16 inch minimum.

3.2 WELDING

3.2.1 General

Unless otherwise authorized or specified, welding shall be by an electric arc welding process using a method which excludes the atmosphere from the molten metal. Welding shall conform to AWS D1.1 and procedures in ASME, Section IX,BPVC, for welding of stainless steel. All mandatory appendices will be considered part of AWS D1.1 and therefore apply. The nonmandatory appendices and commentary will be used as guides and supplementary information unless otherwise specified for the interpretation and application of AWS D1.1.

3.2.2 Filler Metal

The electrode, electrode-flux combination and grade of weld metal shall conform to the appropriate AWS specification for the base metal or metals and welding process being used or shall be as shown where a specific choice of AWS specification allowables is required. Only low hydrogen electrodes shall be used for shielded metal-arc welding. The AWS designation of the electrodes to be used shall be included in the schedule of welding procedure to be furnished. The filler metal shall meet the requirements of AWS D1.1, Section 4 and as specified on drawings or on the approved procedure for welding of stainless steel.

3.2.3 Qualification of Welders and Welding Operators

Welding operators, welders, and tack welders shall be qualified for the particular type of work to be done. Qualification shall be in accordance with AWS D1.1. The welders and welding operators so qualified shall be certified and approved by name prior to any welding being performed by that individual. The qualifications shall be submitted on Form E-4, Appendix E of AWS D1.1 or equal. Prior qualification may be accepted provided the welder has performed satisfactory work in accordance with AWS D1.1 within the preceding 6 months. The welder or welding operator shall be required to repeat the qualifying tests when, in the opinion of the GQAR, their work indicates a reasonable doubt as to their proficiency. Certification shall be submitted for those passing the test and upon approval, they shall be considered qualified. Those not passing shall be disqualified until passing. All expenses in connection with qualification or requalification shall be borne by the Contractor.

3.2.4 Workmanship Requirements

3.2.4.1 Welding Procedure

The approved weld procedure shall consist of detailed procedure specifications for each required joint to be welded with tables or diagrams showing the procedure to be used. The weld procedure shall be submitted on Form E-1 or E-2, Appendix E of AWS D1.1 or equal. Properly documented evidence of compliance with all requirements of these specifications for previous welding joint qualifications tests will establish the joint welding procedure as prequalified and a qualification test will not be required. Each procedure shall be clearly identified as being either prequalified or qualified by tests.

3.2.4.2 Preheat and Interpass Temperature

Preheating shall be performed as required by AWS D1.1 or as otherwise specified. The weldments to be preheated shall be slowly and uniformly heated by approved means to the prescribed temperature, held at that temperature until the welding is completed and then permitted to cool slowly in still air.

3.2.4.3 Stress-Relief Heat Treatment

If stress-relief heat treatment is needed it shall be done in accordance with the requirements of AWS D1.1, Subsection 4.4.

3.2.5 Welding of Dissimilar Ferrous Metals and Stainless

Welding of dissimilar ferrous metals and stainless shall conform to the applicable requirements of Section IX of the current ASME Boiler and Pressure Vessel Code for "Weldings Qualifications," respectively, and the following additional requirements:

a. Welders, welding operators and machines shall be qualified for both materials being welded.

b. Electrodes and welding procedures shall have been previously demonstrated by test to be effective in achieving sound welded joints with equivalent dissimilar metals or stainless steel.

c. Preheat temperature shall be the higher of the specified preheat temperatures for the two materials being joined.

d. Special welding procedures shall be submitted for approval for these joints either approved by or prepared by competent metallurgist whose qualifications have been previously submitted and approved.

e. Except where high strength joints are specifically required, selection of welding electrodes shall include:

(1) Austenitic filler shall be used for welding any chromium steel to an austenitic steel.

(2) Filler metal containing chromium equal to either the higher or lower chromium content of either material shall be used for welding a hardenable chromium steel to another with a chromium content.

(3) Unless otherwise shown, filler metal for welding stainless steel to a carbon steel may be the specified carbon steel filler provided; (i) a high strength joint is not specified; (ii) the affect of hardening is controlled; and (iii) previously fabricated and tested weld tests specimens with the equivalent base metals to be joined. In the event the proposed carbon steel weld rods are determined to be unsuitable by test, the Contractor shall use only an appropriate pretested alloy steel filler rod which will produce sound welds.

(4) Unless otherwise shown, filler metal for welding any chromium steel to any low alloy steel shall be (i) of the same composition as the low alloy steel provided the alloying elements are essential for the service application (ii) any low alloy composition that will provide the mechanical properties for the service application.

(5) Austenitic filler rod may be used generally for joining two dissimilar steels except where control of carbon migration is required.

3.2.6 Inspection

3.2.6.1 General

In conjunction with SECTION 01451, all welding shall be inspected to ensure that the welds conform to the requirements this specification, AWS D1.1, or ASME SECTION IX and the approved welding procedure. Inspection will be performed in two categories: 1) The CQC Welding Program shall guarantee complete compliance of all welds with the contract requirements, and 2) The Government Quality Assurance Program (GQAR) will

be utilized to verify implementation and acceptability of the CQC Welding Program.

3.2.6.2 Contractor's Quality Control (CQC) Welding Program

3.2.6.2.1 General

Inspection performed under the CQC Welding Program shall be in accordance with the specifications herein, Section 6 of AWS D1.1, and in conjunction with SECTION 01451 The Contractor's weld inspector shall hold a current certification as a certified welding inspector (CWI) in accordance with AWS QC1. Non-destructive testing personnel shall be qualified Level II inspectors as qualified under a certified program meeting the guidelines of the American Society of Non-Destructive Testing (ANST) standard SNT-TC-1A. The inspection agency performing non-destructive testing shall have employed a Level III inspector as qualified under a certified program meeting the guidelines of SNT-TC-1A to supervise the Level II inspectors. If requested, sufficient documentation demonstrating that the testing personnel are qualified shall be submitted at least 14 days prior to the testing. Copies of the weld inspector's certification and qualifications for all assistant inspectors shall be submitted.

3.2.6.2.2 Inspection

Inspection and tests shall be performed as necessary prior to welding, during welding, and after welding to ensure that materials and workmanship meet the requirements specified. In addition to visual inspection, all welds shall be subject to non-destructive inspection. As a minimum the following amount of non-destructive inspection shall be performed for each fabricated weldment:

a. Ten percent of the full penetration welds shall be inspected by ultrasonic testing,

b. Ten percent of the groove welds shall be inspected by ultrasonic testing,

c. Ten percent of the fillet welds shall be inspected by magnetic particle testing or liquid penetrant testing, and

d. Radiographic inspection shall be performed on welds designated on the drawings.

e. The samples shall be randomly selected and shall be representative of the welds on that weldment.

Any weld that does not meet the acceptance criteria shall not be counted as meeting the above inspection requirements. Rejection of any portion of a weld inspected on less than a 100 percent basis, by a method other than visual, shall be 100 percent inspected by the method used in finding the defect. This inspection will not count towards meeting the above quality requirements.

3.2.6.2.3 Inspection Agency

Non-destructive inspection of welds and evaluation of tests or inspections as to the acceptability of the welds shall be performed by an agency adequately equipped and qualified to perform such services; or the Contractor may make its own tests or inspections and evaluations, provided the Contractor has available suitable equipment and qualified personnel. In either case, the Inspection Agency or Contractor's personnel qualifications shall be submitted for approval. The evaluation of the tests or inspections shall be subject to approval and all records

shall become the property of the Government. Testing performed as part of the GQAP shall be made in the presence of the GQAR.

3.2.6.2.4 Inspection Procedure

The procedure for making, evaluating and reporting the radiographic testing, ultrasonic testing, magnetic particle inspection, and liquid penetrant inspection of the welds shall conform to the requirements of AWS D1.1. The ultrasonic equipment shall be capable of making a permanent record of the test indications and a record shall be made of each weld tested.

3.2.6.2.5 Acceptability of Welds

All welds shall meet the inspection requirements of AWS D1.1, Section 9.25 for visual, radiographic, ultrasonic, magnetic particle, and liquid penetrant as applicable for the procedure specified.

3.2.6.2.6 Repairs

Defective welds shall be repaired in compliance with AWS D1.1, Section 3.7. A welding repair plan shall be submitted for approval before repairs are made. Defective weld metal shall be removed to sound metal by use of air carbon-arc and/or grinding. Except for repairs of members cut to remove test coupons that were found to have acceptable welds, costs of repairs and retesting shall be borne by the Contractor.

3.2.6.3 Government Quality Assurance Program (GQAP)

3.2.6.3.1 General

All welds shall be subject to inspection by the Government. The Government reserves the right to require the Contractor to conduct non-destructive examination of any weld by any of the methods listed below. The GQAR may require that coupons to be cut from any location in any joint

3.2.6.3.2 Non-Destructive Inspection

The GQAR non-destructive examination of the designated welds may be performed by one of the following methods:

a. Radiographic inspection.

b. Ultrasonic inspection.

c. Magnetic Particle inspection.

d. Dye Penetrant inspection.

These welds shall meet the acceptance standards based upon the respective welds and method of inspection specified in paragraph 3.2.6.2.2 regardless of the method used by the Government to inspect the weld. Ultrasonic or radiographic inspection may be used to ensure proper visual inspection was performed at all stages of the welding process, according to AWS D1.1, Section 6.6.1. Rejected welds found by the GQAP shall be inspected the full length of that weld by the Contractor at its expense using the NDT method which found the first defect in the weld.

3.2.6.3.3 Test Coupons

The Government reserves the right to require the Contractor to remove coupons from completed work when in doubt as to soundness cannot be resolved by non-destructive inspection. Coupons will be subjected to a

guided bend test. Should tests of any two coupons cut from the work of any welder show non-conformance with AWS D1.1, it will be considered evidence of negligence or incompetence, and such welder shall be removed from the work. When coupons are removed from any part of a structure, the members cut shall be repaired with joints of a structure, the members cut shall be repaired with joints which conform to AWS D1.1 or ASME SECTION IX, with peening as approved or directed to relieve residual stress.

3.2.6.4 Steel Castings

Unsound material shall be removed from the surfaces of steel castings which will be incorporated into welded connections by chipping, machining, air-arc gouging, or grinding. Major connections, designed for transfer of stresses, shall not be welded if the temperature of the castings is lower than 100° F. Castings containing over 0.35 percent carbon or over 0.75 percent manganese shall be preheated to a temperature no to exceed 450° F and welding shall be accomplished while the castings are maintained at temperature above 350° F. Welding will not be permitted on castings containing carbon in excess of 0.45 percent, except on written authorization by Contracting Officer. Castings requiring welding repair after the first annealing and casting involving welding fabrication shall be stress-relieved annealed prior to receiving final machining unless otherwise permitted by GQAR.

3.3 MACHINE WORK

3.3.1 General

Tolerances, allowances and gages for metal fits between plain, non-threaded, cylindrical parts shall conform to ANSI B4.1 for the class of fit shown or to the dimensions shown. Where fits are not shown they shall be in accordance with good industrial practice for the intended application and approved prior to the beginning of work. Tolerances for machine-finished surfaces designated by non-decimal dimensions shall be within 1/64-inch unless otherwise specified. Sufficient excess material stock shall be allowed on surfaces requiring machining to ensure true surfaces of solid material while maintaining the specified minimum or finished plate thickness. Finished contact or bearing surfaces shall be true and exact to secure full contact. All surfaces shall be finished in accordance with the contract drawings to ensure proper operation when assembled. Parts shall be accurately machined and all like parts shall be interchangeable. All drilled bolt holes shall be accurately located to ensure interchangeability.

3.3.2 Finished Surfaces

Surface finishes as indicated or specified shall be in accordance with ANSI B46.1. Values of required roughness heights are arithmetical average deviations expressed in micro inches. These values are maximum. Lesser degrees will be satisfactory unless otherwise indicated. Compliance with surface requirements shall be determined by sense of feel and visual inspection of the work compared to Roughness Comparison Specimens in accordance with the provisions of ANSI B46.1. Values of roughness width and waviness height shall be consistent with the general type of finish specified by roughness height. Where the finish is not indicated or specified it shall be that which is most suitable for the particular surface, provide the class of fit required and shall be indicated on the shop drawings by a symbol which conforms to ANSI B46.1 when machine finishing is provided. Flaws such as scratches, ridges, holes, peaks, cracks or checks which will make the part unsuitable for the intended use will be cause for rejection.

3.3.3 Unfinished Surfaces

All work shall be laid out to secure proper matching of adjoining unfinished surfaces unless otherwise directed. Where there is a discrepancy between adjoining unfinished surfaces they shall be ground smooth or machined to secure proper alignment. Unfinished surfaces shall be true to the lines and dimensions shown and shall be ground free of all projections and rough spots. Depressions or holes not affecting the strength or usefulness of the parts shall be filled in using an approved method.

3.3.4 Pin Holes

Pin holes shall be bored in accordance with the dimensions and tolerances shown or noted.

3.3.5 Shafting

All shafting shall be as shown or noted. Fillets shall be provided where changes in section occur. Cold-finished shafting may be used where keyseating or grinding are the only machine work required.

3.4 ZINC COATINGS

Zinc coatings shall be applied in a manner and of a thickness and quality conforming to ASTM A 123. Where zinc coatings are destroyed by cutting, welding, or other causes, the affected areas shall be regalvanized. Coatings 2 ounces or heavier shall be regalvanized with a suitable low-melting zinc base alloy similar to the recommendations of the American Hot-Dip Galvanizers Association to the thickness and quality specified for the original zinc coating. Coatings less than 2 ounces shall be regalvanized by a repair compound conforming to ASTM A780.

3.5 SHOP INSPECTION

Each structural unit shall be inspected prior to assembly to determine the correctness of the fabrication and machining of the component parts. Tolerances shall not exceed those shown. Each unit inspected shall be closely checked to ensure that dimensions and tolerances are met. An inspection record shall be kept for review by the GQAR for each item inspected.

3.6 PROTECTION OF MACHINED SURFACES

Machined surfaces shall be thoroughly cleaned of foreign matter and shall be protected by suitable means. Unassembled pins and bolts shall be oiled and wrapped with moisture resistant paper or protected by other approved means.

3.7 BOLTED CONNECTIONS

3.7.1 General

Bolts, nuts, and washers shall be of the type specified or indicated on the drawings. All nuts shall be equipped with washers except for high strength bolts. Beveled washers shall be used where bearing faces have a slope of more than 1:20 with respect to a plane normal to the bolt axis. Where the use of high strength bolts is specified, the materials, workmanship, and installation shall conform to the applicable provisions of the specification for Structural Joints Using ASTM A 325 or A 490 Bolts issued by the Research Council on Riveted and Bolted structural Joints of the Engineering Foundation. Ribbed bolts will not be acceptable.

3.7.2 Bolt Holes

3.7.2.1 Regular Bolts

Holes for regular bolts shall be drilled or subdrilled and reamed. Holes shall be accurately located, smooth, perpendicular to the member, cylindrical and not more than 1/16-inch larger than the diameter of the bolt, unless shown otherwise.

3.7.2.2 Fitted Bolts

Holes for fitted bolts shall be match-reamed or drilled. Holes shall be smooth, perpendicular to the member and cylindrical. Burrs resulting from reaming shall be removed. The threads shall be entirely outside of the holes. The body diameter of the bolt shall have tolerances as recommended by ANSI B4.1 for the class to fit specified. Fitted bolts shall be fitted in reamed holes by selective assembly to provide an LC 7 or closer tolerance fit.

3.7.2.3 High Strength Bolts

Holes for high strength bolts shall be accurately spaced, cylindrical and perpendicular to the member. The diameter of the hole shall be not more than 1/16-inch larger than the bolt diameter. If the thickness of the material is not greater than the diameter of the bolt, the holes may be punched. If the thickness of the material is greater than the diameter of the bolt, the holes will be either drilled full size or shall be subpunched or subdrilled at least 1/8-inch smaller than the diameter of the bolt and then reamed to full size. Poor matching of holes will be cause for rejection. Drifting done during assembly shall not distort the metal or enlarge the holes. For slight mismatching reaming to a larger diameter for the next standard size bolt will be allowed.

3.8 SET SCREWS

Set screws shall be of the socket type, with sockets of the hexagonal or multisplined shape. Set screws shall not be used for transmitting torsion.

3.9 SPECIAL NONDESTRUCTIVE TESTING

When doubt exist as to the soundness of any part, such part may be subjected to any form of nondestructive testing determined by the GQAR. This may include ultrasonic, magnaflux, dye penetrant, x-ray, gamma ray or any other test that will thoroughly investigate the part in question. The cost of such investigation will be borne by the Government only if the part is found not to be defective. Repair or replacement of defective parts and all retesting shall be at Contractor’s expense. This is in addition to the nondestructive testing specified in paragraph 3.2.6.3.

END OF SECTION 05101

SECTION 05502WC

METALS: MISCELLANEOUS,
STANDARD ARTICLES, SHOP FABRICATED ITEMS
WOLF CREEK

TABLE OF CONTENTS

PART 1 GENERAL

1.1 GENERAL INFORMATION
1.2 REFERENCES
1.3 SUBMITTALS
1.4 TEST OF MATERIALS

PART 2 PRODUCTS

2.1 STEEL CASTINGS
2.2 IRON CASTINGS
2.3 STRUCTURAL STEEL
2.4 STEEL FORGINGS
2.5 SHAFT STEEL
2.6 BOLTS, SCREWS, AND WASHERS
2.7 FLOOR PLATES
2.8 CARBON STEEL PIPE
2.9 OPERATOR’S CAB
2.10 EXPANSION ANCHORS

PART 3 EXECUTION

3.1 OPERATOR’S CAB
3.2 INSPECT RIVETS AND BOLTS
3.3 SAFETY CABLE
3.4 BRIDGE RAIL REPAIR

SECTION 05502WC

METALS: MISCELLANEOUS,
STANDARD ARTICLES, SHOP FABRICATED ITEMS
WOLF CREEK

PART 1 GENERAL

1.1 GENERAL INFORMATION

Fabrication requirements and workmanship provisions for items specified in this section shall also conform with the requirements of SECTION 05101.

1.2 REFERENCES

The publications listed below form a part of this specification to the extent referenced. The publications are referred to in the text by basic designation only.

AMERICAN SOCIETY OF MECHANICAL ENGINEERS (ASME)

ASME B1.1	(1989) Unified Inch Screw Threads (UN and UNR Threaded Form)
ASME B18.2.1	(1996) Square and Hex Bolts and Screws (Inch Series)
ASME B18.2.2	(1987; R 1993) Square and Hex Nuts (Inch Series)
ASME B18.3	(1998) Socket Cap, Shoulder and Set Screws (Inch Series) Including Dimensions of Hexagon and Spline Sockets and Keys to Match
ASME B18.6.2	(1998) Slotted Head Cap Screws, Square Head Set Screws, and Slotted Headless Set Screws
ASME B18.6.3	(1998) Machine Screws and Machine Screw Nuts
ASME B18.22.1	(1965; R 1998) Plain Washers

AMERICAN SOCIETY FOR TESTING AND MATERIALS (ASTM)

ASTM A 27/A 27M	(1995) Steel Castings, Carbon, for General Application
ASTM A36	(2001) Carbon Structural Steel
ASTM A48	(2000) Gray Iron Castings
ASTM A53	(2002) Pipe, Steel, Black and Hot-Dipped, Zinc-Coated Welded and Seamless
ASTM A108	(1999) Steel Bars, Carbon, Cold Finished, Standard Quality
ASTM A 148/A 148M	(2002) Steel Castings, High-Strength, for Structural Purposes
ASTM A307	(2002) Carbon Steel Bolts and Studs, 60,000 psi Tensile Strength

ASTM A325	(2002) Structural Bolts, Steel, Heat Treated, 120/105 ksi Minimum Tensile Strength
ASTM A572	(2001) High-Strength Low-Alloy Columbium-Vanadium Structural Steel
ASTM A 576	(1990; R 2000) Steel Bars, Carbon, Hot-Wrought, Special Quality.
ASTM A 588/A 588M	(2001) High-Strength Low-Alloy Structural Steel with 50 ksi (345mpa) Minimum Yield Point to 4 in. (100 mm) Thick
ASTM A 668/A 668M	(2002) Steel Forgings, Carbon Alloy, for General Industrial Use.
ASTM A786 Rev B	(2000) Rolled Steel Floor Plates
ASTM B6	(2000) Zinc Metal (Slab Zinc)

AMERICAN SOCIETY OF MECHANICAL ENGINEERS (ASME)

ASME B30.2	(2001) Overhead and Gantry Cranes (Top Running Bridge, Single or Multiple Girder, Top Running Trolley Hoist)

CRANE MANUFACTURERS ASSOCIATION OF AMERICA (CMAA)

CMAA-70	(2000) Specifications for Electric Overhead Traveling Cranes

1.3 SUBMITTALS

Government approval is required for all submittals with a "GA" designation; submittals having an "FIO" designation are for information only. The following shall be submitted as stated below in accordance with SECTION 01330:

SD-01 Data

Materials List; GA

Lists of materials as specified herein and in SECTION 05101.

SD-04 Drawings

Detail Drawings; GA

Complete detail drawings for Operator’s Cab and other Shop Fabricated Metal Items; as specified herein and in SECTION 05101. Drawings of the Operator’s Cab shall include details for installing on the bridge crane. Complete detail drawings showing crane rail replacement or repair shall be submitted.

SD-09 Reports

Test Reports; FIO

Certified test reports for materials tests and analyses as specified herein and in SECTION 05101.

SD-18 Records

Disposition Records; FIO

Records which identify the disposition of approved material and fabricated items in the work as specified herein and in SECTION 05101.

1.4 TEST OF MATERIALS

1.4.1 General

All materials, supplies, and parts and assemblies thereof entering into the work to be done under these specifications shall be tested, unless otherwise directed, in conformity with the Contract Clauses, and in accordance with the requirements of these specifications. In case the Contractor desires to use stock material not manufactured specifically for the work covered by these specifications, they shall, in accordance with SECTION 01451, submit evidence that such material conforms to the requirements of these specifications, in which case detailed test on these materials may be waived.

1.4.2 Test

All test or trials shall be made in accordance with SECTION 01451. Results of these test shall be submitted as soon as practicable after the test are made. The results shall be submitted in a form which provides a means of determining compliance with the specifications for the material tested.

1.4.3 Specimens Samples

Test specimens and samples for analysis shall be plainly marked to indicate the materials they represent and, if required, they shall be properly boxed and prepared for shipment.

1.4.4 Cost

All cost of all test and trials, excepting the pay and expense of the Government Inspector, shall be borne by the Contractor and shall be included in the contract price of these specifications.

PART 2 PRODUCTS

2.1 STEEL CASTINGS

2.1.1 General

Steel castings shall conform to ASTM A 27 OR ASTM A 148 grade as required, except that repairs to castings shall not be made without the knowledge and prior approval of the GQAR. Minor surface imperfections not affecting the strength of castings may be welded in the “green” if approved by the inspector. Surface imperfections shall be considered actual wall thickness, but in no case greater that 1-inch. Defects other than minor surface imperfections may be welded only when specifically authorized in accordance with the following requirements:

a. The defects have been entirely removed and are judged not to affect the strength, use, or machinability of the castings, when properly welded and stress relieved.

b. The proposed welding procedure, stress relieving and method of examination of the repair work have been submitted and approved.

2.1.2 Castings Requiring Stress Relief

Castings for parts carrying calculated stresses, parts subject to shock and other principal parts, including machine frame castings, gears, and heavy duty bearings stand shall be stress-relief annealed before being machined.

2.2 IRON CASTINGS

Iron castings shall conform to ASTM A 48, class as required.

2.3 STRUCTURAL STEEL

Structural steel shall conform to ASTM A 36, ASTM A 572, or ASTM A 588.

2.4 STEEL FORGINGS

Steel forgings shall conform to ASTM A 688, class as required.

2.5 SHAFT STEEL

Steel for shafting shall conform to ASTM A 108, A 576 or applicable specifications of the Society of Automotive Engineers, Inc.

2.6 BOLTS, SCREWS, AND WASHERS

2.6.1 General

Material for fitted bolts shall conform to the applicable requirements of ASTM A307. Washers shall conform to the applicable requirements in paragraph 2.6.2 f.

2.6.2 Machine Bolts, Studs, Screws and Washers

Machine bolts, studs, screws and washers furnished as an integral part of a catalog item shall conform to the manufacturer’s standard practice. Except where otherwise specified, machine bolts, studs, screws and washers shall conform to the applicable requirements of the following specifications:

a. Threads. All bolts, studs, machine screws, nuts, and tapped holes shall be threaded in accordance with ASME B1.1.

b. Bolts. Bolts shall be finished hex bolts conforming to ASME B18.2.1, SAE grade 2 or higher.

c. Nuts. Nuts shall be hex conforming to ASME B18.2.2.

d. Cap and Set Screws. Cap and set screws shall conform to the requirements of ASME B18.3 or ASME B18.6.2.

e. Machine Screws and Nuts. Machine screws and nuts shall conform to the requirements of ASME B18.6.3.

f. Washers. Plain washers shall conform to the requirements of ASME B18.22.1.

2.6.3 Structural Bolts

Structural bolts shall conform to the requirements of ASTM A325 or ASTM A307, Grade A.

2.7 FLOOR PLATES

Floor plates shall conform to the requirements of ASTM A-786 pattern to match existing plate.

2.8 CARBON STEEL PIPE

Carbon steel pipe shall conform to the requirement of ASTM A53.

2.9 OPERATOR'S CAB

2.9.1 Design

Operator's cab shall be designed and constructed in accordance with CMAA 70 and ASME B30.2 and as shown. The cab shall be designed for a load of 50 lb/ft^2 of floor area, exclusive of the weight of any equipment attached to the cab. Cab shall be easily accessed by crane operator. Cab shall have space near cab entrance for storage of a hand fire extinguisher.

2.9.2 Cab Construction

The existing cab shall be removed and a new cab will be designed and installed that provides a clear view of the operating floor and hook for operator. Cab shall be constructed of structural steel shapes, the exterior unglazed portion of cab shall be covered with selected steel sheets not less than 1/8 in thick, the floor shall be made of reinforced steel plate. The interior unglazed portions of wall and doors shall be fabricated of reinforced steel sheets not less than 18 gage thick. Glazed portions of the cab shall be polished glass of the laminated safety type, 1/4" thick minimum. Items of equipment shall be located so they will not obstruct vision through any window. Rubber mats with a minimum thickness of 1/8 inch shall be provided for the floor. The glazed portion of the cab floor shall be polished clear polycarbonate plastic and shall be designed for live load of not less than 500 lbs.

2.10 EXPANSION ANCHORS

Expansion anchors shall conform to Fed. Spec. FF-S-325, Group II, Type 4.

PART 3 EXECUTION

3.1 OPERATOR'S CAB

The existing operator's cab shall be removed and replaced with a new cab as shown. The existing operator's cab may contain asbestos panels (transite panels) that shall be disposed of in accordance with SECTIONS 02080 and 02120.

3.2 INSPECT RIVETS AND BOLTS

The rivets and bolts on the bridge girders and equalizing beams shall be inspected for soundness. Loose rivets and bolts shall be identified visually by noting signs of movement between adjacent plates or by tapping with a steel hammer and noting the tone of the ringing sound emitted. Loose rivets and bolts shall be replaced with ASTM A-325 high strength bolts of the same size.

3.3 SAFETY CABLE

Safety cable shall be installed along both crane rail corbels as shown.

3.4 BRIDGE RAIL REPAIR

The gaps between the existing crane rail sections shall be adjusted so the tight joints are tight and the expansion joints have 1/16 inch to 1/8 inch gaps. The rail ends at the tight joints shall be squared up by grinding off the elongated metal that hangs over the top of the rail ends. This grinding shall allow the rail ends to butt together tightly, forming a tight joint (0 to 1/32 inch gap). The rail ends at the expansion joints shall also be squared up by grinding. Inspect rail clips and bolts. Tighten bolts to recommended torque. The rail span shall be inspected before and after the bridge rail repair and the rail span misalignment shall not be increased. If the allowable tolerance found in CMAA 70 is not met, the Government shall be informed.

END OF SECTION 05502WC

SECTION 05502CH

METALS: MISCELLANEOUS,
STANDARD ARTICLES, SHOP FABRICATED ITEMS
CENTER HILL

TABLE OF CONTENTS

PART 1 GENERAL

1.1 GENERAL INFORMATION
1.2 REFERENCES
1.3 SUBMITTALS
1.4 TEST OF MATERIALS

PART 2 PRODUCTS

2.1 STEEL CASTINGS
2.2 IRON CASTINGS
2.3 STRUCTURAL STEEL
2.4 STEEL FORGINGS
2.5 SHAFT STEEL
2.6 BOLTS, SCREWS, AND WASHERS
2.8 CARBON STEEL PIPE
2.9 OPERATOR’S CAB
2.10 EXPANSION ANCHORS

PART 3 EXECUTION

3.1 OPERATOR’S CAB
3.2 INSPECT RIVETS AND BOLTS
3.3 SAFETY CABLE
3.4 BRIDGE RAIL REPAIR
3.5 LADDERS

SECTION 05502CH

METALS: MISCELLANEOUS,
STANDARD ARTICLES, SHOP FABRICATED ITEMS
CENTER HILL

PART 1 GENERAL

1.1 GENERAL INFORMATION

The following work shall be completed; an emergency escape shall be added, the gaps in the crane rails shall be repaired, and the cab shall be modified. Fabrication requirements and workmanship provisions for items specified in this section shall also conform with the requirements of SECTION 05101.

1.2 REFERENCES

The publications listed below form a part of this specification to the extent referenced. The publications are referred to in the text by basic designation only.

AMERICAN SOCIETY OF MECHANICAL ENGINEERS (ASME)

ASME B1.1	(1989) Unified Inch Screw Threads (UN and UNR Threaded Form)
ASME B18.2.1	(1996) Square and Hex Bolts and Screws (Inch Series)
ASME B18.2.2	(1987; R 1993) Square and Hex Nuts (Inch Series)
ASME B18.3	(1998) Socket Cap, Shoulder and Set Screws (Inch Series) Including Dimensions of Hexagon and Spline Sockets and Keys to Match
ASME B18.6.2	(1998) Slotted Head Cap Screws, Square Head Set Screws, and Slotted Headless Set Screws
ASME B18.6.3	(1998) Machine Screws and Machine Screw Nuts
ASME B18.22.1	(1965; R 1998) Plain Washers

AMERICAN SOCIETY FOR TESTING AND MATERIALS (ASTM)

ASTM A 27/A 27M	(1995) Steel Castings, Carbon, for General Application
ASTM A36	(2001) Carbon Structural Steel
ASTM A48	(2000) Gray Iron Castings
ASTM A53	(2002) Pipe, Steel, Black and Hot-Dipped, Zinc-Coated Welded and Seamless
ASTM A108	(1999) Steel Bars, Carbon, Cold Finished, Standard Quality
ASTM A 148/A 148M	(2002) Steel Castings, High-Strength, for Structural Purposes
ASTM A307	(2002) Carbon Steel Bolts and Studs, 60,000 psi Tensile Strength

ASTM A325	(2002) Structural Bolts, Steel, Heat Treated, 120/105 ksi Minimum Tensile Strength
ASTM A572	(2001) High-Strength Low-Alloy Columbium-Vanadium Structural Steel
ASTM A 576	(1990; R 2000) Steel Bars, Carbon, Hot-Wrought, Special Quality.
ASTM A 588/A 588M	(2001) High-Strength Low-Alloy Structural Steel with 50 ksi (345mpa) Minimum Yield Point to 4 in. (100 mm) Thick
ASTM A 668/A 668M	(2002) Steel Forgings, Carbon Alloy, for General Industrial Use.
ASTM B6	(2000) Zinc Metal (Slab Zinc)

AMERICAN SOCIETY OF MECHANICAL ENGINEERS (ASME)

ASME B30.2	(2001) Overhead and Gantry Cranes (Top Running Bridge, Single or Multiple Girder, Top Running Trolley Hoist)

CRANE MANUFACTURERS ASSOCIATION OF AMERICA (CMAA)

CMAA-70	(2000) Specifications for Electric Overhead Traveling Cranes

US ARMY CORPS OF ENGINEERS (USACE)

EM 385-1-1	(2003) Safety and Health Requirements Manual

1.3 SUBMITTALS

Government approval is required for all submittals with a "GA" designation; submittals having an "FIO" designation are for information only. The following shall be submitted as stated below in accordance with SECTION 01330:

SD-01 Data

Materials List; GA

Lists of materials as specified herein and in SECTION 05101.

Computations; GA

Computations for emergency escape shall be submitted.

SD-04 Drawings

Detail Drawings; GA

Complete detail drawings for Operator’s Cab and other Shop Fabricated Metal Items; as specified herein and in SECTION 05101. Drawings of the Operator’s Cab shall include details for installing on the bridge crane. Complete detail drawings showing crane rail repair and emergency escape shall be submitted.

SD-09 Reports

Test Reports; FIO

Certified test reports for materials tests and analyses as specified herein and in SECTION 05101.

SD-18 Records

Disposition Records; FIO

Records which identify the disposition of approved material and fabricated items in the work as specified herein and in SECTION 05101.

1.4 TEST OF MATERIALS

1.4.1 General

All materials, supplies, and parts and assemblies thereof entering into the work to be done under these specifications shall be tested, unless otherwise directed, in conformity with the Contract Clauses, and in accordance with the requirements of these specifications. In case the Contractor desires to use stock material not manufactured specifically for the work covered by these specifications, they shall, in accordance with SECTION 01451, submit evidence that such material conforms to the requirements of these specifications, in which case detailed test on these materials may be waived.

1.4.2 Test

All test or trials shall be made in accordance with SECTION 01451. Results of these test shall be submitted as soon as practicable after the test are made. The results shall be submitted in a form which provides a means of determining compliance with the specifications for the material tested.

1.4.3 Specimens Samples

Test specimens and samples for analysis shall be plainly marked to indicate the materials they represent and, if required, they shall be properly boxed and prepared for shipment.

1.4.4 Cost

All cost of all test and trials, excepting the pay and expense of the Government Inspector, shall be borne by the Contractor and shall be included in the contract price of these specifications.

PART 2 PRODUCTS

2.1 STEEL CASTINGS

2.1.1 General

Steel castings shall conform to ASTM A 27 OR ASTM A 148 grade as required, except that repairs to castings shall not be made without the knowledge and prior approval of the GQAR. Minor surface imperfections not affecting the strength of castings may be welded in the “green” if approved by the inspector. Surface imperfections shall be considered actual wall thickness, but in no case greater that 1-inch. Defects other than minor surface imperfections may be welded only when specifically authorized in accordance with the following requirements:

a. The defects have been entirely removed and are judged not to affect the strength, use, or machinability of the castings, when properly welded and stress relieved.

b. The proposed welding procedure, stress relieving and method of examination of the repair work have been submitted and approved.

2.1.2 Castings Requiring Stress Relief

Castings for parts carrying calculated stresses, parts subject to shock and other principal parts, including machine frame castings, gears, and heavy duty bearings stand shall be stress-relief annealed before being machined.

2.2 IRON CASTINGS

Iron castings shall conform to ASTM A 48, class as required.

2.3 STRUCTURAL STEEL

Structural steel shall conform to ASTM A 36, ASTM A 572, or ASTM A 588.

2.4 STEEL FORGINGS

Steel forgings shall conform to ASTM A 688, class as required.

2.5 SHAFT STEEL

Steel for shafting shall conform to ASTM A 108, A 576 or applicable specifications of the Society of Automotive Engineers, Inc.

2.6 BOLTS, SCREWS, AND WASHERS

2.6.1 General

Material for fitted bolts shall conform to the applicable requirements of ASTM A307. Washers shall conform to the applicable requirements in paragraph 2.6.2 f.

2.6.2 Machine Bolts, Studs, Screws and Washers

Machine bolts, studs, screws and washers furnished as an integral part of a catalog item shall conform to the manufacturer’s standard practice. Except where otherwise specified, machine bolts, studs, screws and washers shall conform to the applicable requirements of the following specifications:

a. Threads. All bolts, studs, machine screws, nuts, and tapped holes shall be threaded in accordance with ASME B1.1.

b. Bolts. Bolts shall be finished hex bolts conforming to ASME B18.2.1, SAE grade 2 or higher.

c. Nuts. Nuts shall be hex conforming to ASME B18.2.2.

d. Cap and Set Screws. Cap and set screws shall conform to the requirements of ASME B18.3 or ASME B18.6.2.

e. Machine Screws and Nuts. Machine screws and nuts shall conform to the requirements of ASME B18.6.3.

f. Washers. Plain washers shall conform to the requirements of ASME B18.22.1.

2.6.3 Structural Bolts

Structural bolts shall conform to the requirements of ASTM A325 or ASTM A307, Grade A.

2.8 CARBON STEEL PIPE

Carbon steel pipe shall conform to the requirement of ASTM A53.

2.9 OPERATOR'S CAB

The existing cab shall be modified and shall provide a clear view of the operating floor and hook for operator. Glazed portions of the cab shall be polished glass of the laminated safety type, 1/4" thick minimum. Items of equipment shall be located so they will not obstruct vision through any window. Rubber mats with a minimum thickness of 1/8 inch shall be provided for the floor. The glazed portion of the cab floor shall be polished clear polycarbonate plastic and shall be designed for live load of not less than 500 lbs. The existing operator controls shall be removed and new controls shall be added. An operator chair shall be added.

2.10 ANCHOR BOLTS

Anchor bolts shall be 3/4" epoxy set. Allowable tension load shall be 10000 lbs minimum. Anchor bolts shall be installed according to the manufacturers installation instructions.

PART 3 EXECUTION

3.1 OPERATOR'S CAB

The existing operator's cab shall be modified as shown. The existing operator's cab may contain asbestos panels (transite panels) that shall be disposed of in accordance with SECTIONS 02080 and 02120.

3.2 INSPECT RIVETS AND BOLTS

The rivets and bolts on the bridge girders and equalizing beams shall be inspected for soundness. Loose rivets and bolts shall be identified visually by noting signs of movement between adjacent plates or by tapping with a steel hammer and noting the tone of the ringing sound emitted. Loose rivets and bolts shall be replaced with ASTM A-325 high strength bolts of the same size.

3.3 SAFETY CABLE

Safety cable shall be installed along both crane rail corbels as shown.

3.4 BRIDGE RAIL REPAIR

The gaps between the existing crane rail sections shall be adjusted so the tight joints are tight and the expansion joints have 1/16 inch to 1/8 inch gaps. The rail ends at the tight joints shall be squared up by grinding off the elongated metal that hangs over the top of the rail ends. This grinding shall allow the rail ends to butt together tightly, forming a tight joint (0 to 1/32 inch gap). The rail ends at the expansion joints shall also be squared up by grinding. Inspect rail clips and bolts. Tighten bolts to recommended torque. The rail span shall be inspected before and after the bridge rail repair and the rail span misalignment shall not be increased. If the allowable tolerance found in CMAA 70 is not met the government shall be informed.

3.5 LADDERS

Ladders shall be provided for emergency egress from the bridge crane. A ladder shall be provided located from the top of the end truck to the bumper. A platform and another ladder shall be provided from the bumper to the corbel. This ladder shall be retractable to allow the bumper stop to be operable. Another ladder with a ladder cage shall be provided located from the corbel to the service bay floor. All three (3) ladders shall conform to EM 385-1-1

END OF SECTION 05502CH

SECTION 09900

PAINTING

TABLE OF CONTENTS

PART 1 GENERAL

1.1 GENERAL INFORMATION
1.2 REFERENCES
1.3 SUBMITTALS
1.4 WORK PERFORMANCE
1.5 LEAD PROTECTION PROGRAM
1.6 QUALIFICATIONS
1.7 SAFETY AND HEALTH PROVISIONS
1.8 MEDICAL STATUS
1.9 CHANGE IN MEDICAL STATUS
1.10 DEFINITIONS AND NOMENCLATURE
1.11 SAMPLING AND TESTING
1.12 PACKAGING, LABELING, DELIVERY, AND STORAGE OF PAINTS

PART 2 PRODUCTS

2.1 PAINTS TO BE APPLIED - NUMBER OF COATS AND FORMULAS
2.2 LABELING, DELIVERY, AND STORAGE OF PAINTS

PART 3 EXECUTION

3.1 CLEANING AND PAINTING
3.2 DAMAGE PREVENTION
3.3 TOUCH-UP PAINTING
3.4 CONTRACTOR'S QUALITY CONTROL (CQC)

SECTION 09900

PAINTING

PART 1 GENERAL

1.1 GENERAL INFORMATION

The work covered by this section consists of furnishing all plant, labor, equipment, appliances, and materials; and in performing all operations in connection with preparation of surfaces and application of paint and other specified materials. It shall be assumed that the existing paint contains lead. Transportation and disposal requirements for waste generated during removal of the paint are contained in SECTION 02021.

1.2 REFERENCES

The publications listed below form a part of this specification to the extent referenced. The publications are referred to in the text by basic designation only.

AMERICAN NATIONAL STANDARDS INSTITUTE (ANSI)

ANSI Z87.1	(1989; Z87.1a) Occupational and Educational Eye and Face Protection

COMMERCIAL ITEM DESCRIPTIONS (CID)

CID A-A 2962 Rev A	(1998) Enamel, Alkyd (Metric)

CODE OF FEDERAL REGULATIONS (CFR)

29 CFR 1910	Occupational Safety and Health Standards
29 CFR 1910.20	Access to Employee Exposure and Medical Records
29 CFR 1910.94	Ventilation
29 CFR 1910.134	Respiratory Protection
29 CFR 1910.146	Permit-required Confined Spaces
29 CFR 1910, Subpart I	Personal Protective Equipment
29 CFR 1926	Safety and Health Regulations for Construction
29 CFR 1926.62	Lead
40 CFR 117	Determination of Reportable Quantities for Hazardous Substances
40 CFR 122	EPA Administered Permit Programs: the National Pollutant Discharge Elimination System
40 CFR 302	Designation, Reportable Quantities, and Notification
40 CFR 355	Emergency Planning and Notification
49 CFR 171, Subchapter C	Hazardous Materials Regulations

ENGINEERING MANUAL (EM)

EM 385-1-1	(2003) U.S. Army Corps of Engineers Safety and Health Requirements Manual

INDUSTRIAL SAFETY EQUIPMENT ASSOCIATION (ISEA)

ANSI Z358.1	(1998) Emergency Eyewash Shower Equipment

NATIONAL FIRE PROTECTION ASSOCIATION (NFPA)

NFPA 70	(1998) National Electrical Code 1999 Edition

STEEL STRUCTURES PAINTING COUNCIL (SSPC) SPECIFICATION

SSPC-SP 1	(1982) Solvent Cleaning
SSPC-SP 3	(1995) Power Tool Cleaning
SSPC-SP 7	(2000) Brush-Off Blast Cleaning
SSPC Paint 25	(1991) Red Iron Oxide, Raw Linseed Oil and Alkyd Primer (without lead and chromate pigments)

1.3 SUBMITTALS

Submittals required by this section of the Technical Specifications shall be for Government approval (GA) or for information only (FIO), and shall be submitted as stated below in accordance SECTION 01330. The time of submittal shall be in accordance with SECTION 01330 unless otherwise indicated below.

SD-08 Statements

Notification of Paint Batch Sampling; FIO

Notification to witness sampling of each batch of paint will require 48 hours, excluding weekends, para. 1.11.1.

Qualifications and Experience; GA

The Contractor shall provide certification pursuant to paragraph QUALIFICATIONS for all job sites. Submittal of the qualifications and experience of any additional qualified and competent persons the CIH, IH, or CSP employs to provide on-site safety and health will also be provided. Acceptance of this submission must be obtained prior to the submission of other required safety and health submittal items.

Airborne Sampling Results; GA

The contractor shall provide the name of the accredited laboratory, listed by the American Industrial Hygiene Association (AIHA), to be used to conduct the analysis of any collected air samples. In addition, the contractor shall provide the Contracting Officer with a copy of the test results from the laboratory within 5 working days of the sampling date and shall provide results from direct-reading instrumentation on the same day the samples are collected.

Ventilation Assessment; GA

The contractor shall develop a plan to provide ventilation assessment for all job sites as required by paragraph PAINT APPLICATION, subparagraph VENTILATION.

Containment Plan; GA

For all job sites where lead is present, the Contractor shall develop a plan for containing all lead contaminated waste. This plan shall identify the containment areas and detail the methods and procedures to be used to contain emissions during abrasive blasting and any other lead-based paint removal activities. The contractor shall also identify the procedures for removing debris.

Water Quality Plan; GA

For all job sites where lead is present, the Contractor shall develop a plan to ensure that no lead is released into bodies of water or storm sewers. Therefore, NPDES permits per EPA regulation 40 CFR 122 are not required for the project. The plan shall include provisions for halting work if spills or emissions are observed entering into bodies of water or found in areas where storm water runoff could carry the debris into bodies of water or storm sewers. The plan shall also address cleanup and reporting procedures. In the event that there are any releases of lead paint debris into the waterways, with reportable quantities of hazardous substances designated pursuant to Section 311 of the Clean Water Act, they shall be reported to the EPA in accordance with 40 CFR 117 and 40 CFR 355. Releases or spills that carry into waterways or storm sewers shall be thoroughly documented. The documentation shall include the time and location of the release, amount of material released, actions taken to clean up the debris, amount of debris recovered, and corrective action taken to avoid a reoccurrence. Releases shall also be reported to the Coast Guard and other state and local authorities as appropriate. If the release is equivalent to 10 pounds or more of lead-containing material in a 24-hour period, it is considered to be a reportable quantity under CERCLA. The Contractor shall comply with 40 CFR 302.

SD-09 Reports

Certified Test Reports, Paints and Thinners; FIO

Certified test reports for paints and thinners, 30 calendar days prior to their use, para. 1.11.2.a.

SD-14 Samples

Paints and Thinners; GA

Samples of paints and thinners of each batch, 30 calendar days prior to their use, para. 1.11.1.

1.4 WORK PERFORMANCE

Work shall be performed in accordance with the requirements of 29 CFR 1910, 29 CFR 1926, EM 385-1-1, and other references as listed herein. Matters of interpretation of the standards shall be submitted to the Contracting Officer for resolution before starting work. Where the regulations conflict, the most stringent requirements shall apply.

1.5 LEAD PROTECTION PROGRAM

For all jobsites where lead is present, the Contractor shall develop a comprehensive lead protection program. The program shall include, but is not limited to the following:

a. Containment Plan
b. Water Quality Plan

Health and safety requirements for workers in accordance with 29 CFR 1926.62, including personal protective equipment, hygiene facilities, training, exposure assessment/personal air monitoring plan, and medical requirements, shall be incorporated into the Paint Removal and Painting Health and Safety Plan (see paragraph SAFETY AND HEALTH PROVISIONS of this section).

1.6 QUALIFICATIONS

Qualifications and experience shall comply with the following.

1.6.1 Certified Professional

The Contractor shall provide a person who is qualified and competent as defined in Section 01 of EM 385-1-1, will develop the required safety and health submittal, and will be responsible for on-site safety and health during the contract period. The person shall be a Certified Industrial Hygienist (CIH), an Industrial Hygienist (IH), or a Certified Safety Professional (CSP) with a minimum of 3 years of demonstrated experience in similar related work. The Contractor shall certify that the Certified Industrial Hygienist (CIH) holds current and valid certification from the American Board of Industrial Hygiene (ABIH), that the IH is considered board eligible by written confirmation from the ABIH, or that the CSP holds current and valid certification from the American Board of Certified Safety Professionals. The CIH, IH, or CSP may utilize other qualified and competent persons, as defined in EM 385-1-1, to conduct on-site safety and health activities as long as these persons have a minimum of 3 years of demonstrated experience in similar related work and are under the direct supervision of the CIH, IH, or CSP. For lead containing jobsites, the competent and qualified person shall have successfully completed an EPA or state accredited lead-based paint abatement Supervisor course specific to the work to be performed and shall possess current and valid state and/or local government certification, as required.

1.6.2 Certified Laboratory

The Contractor shall provide documentation which includes the name, address, and telephone number of the laboratories to be providing services. In addition, the documentation shall indicate that each laboratory is an EPA National Lead Laboratory Accreditation Program (NLLAP) accredited laboratory and that each is rated proficient in the NIOSH/EPA Environmental Lead Proficiency Analytical Testing Program (ELPAT) and will document the date of current accreditation. Certification shall include accreditation for heavy metal analysis, list of experience relevant to analysis of lead in air, and a Quality Assurance and Quality Control Program.

1.7 SAFETY AND HEALTH PROVISIONS

Paragraph SAFETY AND HEALTH PROVISIONS supplements the requirements of EM 385-1-1, paragraph (1). In any conflict between Section 01 of EM 385-1-1 and this paragraph, the provisions herein shall govern. EM 385-1-1 requires the preparation of an Accident Prevention Plan or APP (see also SECTION 02080, "ASBESTOS ABATEMENT"). The Accident Prevention Plan

shall incorporate Activity Hazard Analyses and a Health and Safety Plan for Paint Removal and Painting as separate appendices into one site specific Accident Prevention Plan document. Any portions of the Contractor's overall Safety and Health Program that are referenced in the Accident Prevention Plan, e.g., respirator program, hazard communication program, confined space entry program, etc., shall be included as appendices to the Accident Prevention Plan.

1.7.1 Abrasive Blasting

The Contractor shall comply with the requirements in Section 06.H of EM 385-1-1.

1.7.1.1 Hoses and Nozzles

In addition to the requirements in Section 20 of EM 385-1-1, hoses and hose connections of a type to prevent shock from static electricity shall be used. Hose lengths shall be joined together by approved couplings of a material and type designed to prevent erosion and weakening of the couplings. The couplings and nozzle attachments shall fit on the outside of the hose and shall be designed to prevent accidental disengagement.

1.7.1.2 Personal Protective Equipment for Abrasive Blasting Operators

Blasting operators shall be protected by MSHA/NIOSH approved abrasive blasting helmets with appropriate respiratory protection. Breathing air, source of supply and other respirator criteria shall conform to the requirements EM 385-1-1, section 05.E. These workers shall be provided with full-body coveralls and head coverings, heavy canvas or leather aprons or equivalent protection, work boots with non-skid soles, inner gloves, heavy leather or canvas outer gloves, eye protection and hearing protection.

1.7.1.3 Workers Other Than Blasters

Workers other than blasting operators working in close proximity to abrasive blasting operations shall be protected by utilizing MSHA/NIOSH-approved half-face or full-face air purifying respirators equipped with high-efficiency particulate air (HEPA) filters, eye protection meeting or exceeding ANSI Z87.1 and hearing protectors (ear plugs and/or ear muffs) providing at least 20 dBA reduction in noise level.

1.7.2 Cleaning with Compressed Air

Cleaning with high pressure compressed air after abrasive blasting operations shall be in accordance with Section 20.B.5 of EM 385-1-1 and personnel shall be protected by the same equipment required for abrasive blasters.

1.7.3 Cleaning with Solvents

1.7.3.1 Ventilation

Ventilation shall be provided where required by 29 CFR 1910.146 or where the concentration of solvent vapors exceeds 10 percent of the Lower Explosive Limit (LEL). Ventilation shall be in accordance with 29 CFR 1910.94, paragraph (c)(5).

1.7.3.2 Personal Protective Equipment

Personal protective equipment shall be provided where required by 29 CFR 1910.146 and in accordance with 29 CFR 1910, Subpart I.

1.7.4 Pretreatment of Metals and Concrete with Acids

1.7.4.1 Personal Protective Equipment

Personnel shall be protected in accordance with 29 CFR 1910, Subpart I.

1.7.4.2 Emergency Equipment

In addition to the requirements of Section 05 of EM 385-1-1, the contractor shall provide an eyewash in accordance with ISEA Z358.1, paragraph (6).

1.7.5 Torch Cutting Painted Surfaces

The Contractor shall comply with Section 10 of EM 385-1-1. If paint removal is not performed prior to torch cutting a painted surface, the employees shall be protected by approval of SCBA or SAR (air line) respirators. If the paint removal is performed prior to torch cutting, the surface to be cut shall be stripped of paint for a distance of at least 4 inches from the area of heat application. Employees stripping paint by scraping or sanding shall be protected by MSHA/NIOSH-approved half-face or full-face air purifying respirators equipped with high-efficiency particulate air (HEPA) filters.

1.7.6 Paint Application

1.7.6.1 Ventilation

When using solvent-based paint in confined spaces, ventilation shall be provided to exchange air in the space at a minimum rate of 5,000 cubic feet per minute per spray gun in operation. It may be necessary to install both a mechanical supply and exhaust ventilation system to effect adequate air changes within the confined space. All air-moving devices shall be located and affixed to an opening of the confined space in a manner that assures that the airflow is not restricted or short circuited and is supplied in the proper direction. Means of egress shall not be blocked. Ventilation shall be continued after completion of painting and through the drying phase of the operation. If the ventilation system fails or the concentration of volatiles exceeds 10 percent of the LEL (except in the zone immediately adjacent to the spray nozzle), painting shall be stopped and spaces evacuated until such time that adequate ventilation is provided. An audible alarm that signals system failure shall be an integral part of the ventilation system. The effectiveness of the ventilation shall be checked by using ventilation smoke tubes and making frequent oxygen and combustible gas readings during painting operations. Exhaust ducts shall discharge clear of the working areas and away from possible sources of ignition.

1.7.6.2 Explosion Proof Equipment

Electrical wiring, lights, and other equipment located in the paint spraying area shall be of the explosion proof type designed for operation in Class I, Division 1, Group D, hazardous locations as required by the NFPA 70. Electrical wiring, motors, and other equipment, outside of but within 20 feet of any spraying area, shall not spark and shall conform to the provisions for Class I, Division 2, Group D, hazardous locations. Electric motors used to drive exhaust fans shall not be placed inside spraying areas or ducts. Fan blades and portable air ducts shall be constructed of nonferrous materials. Motors and associated control equipment shall be properly maintained and grounded. The metallic parts of air-moving devices, spray guns, connecting tubing, and duct work shall be electrically bonded and the bonded assembly shall be grounded.

1.7.6.3 Further Precautions

a. Workers shall wear nonsparking safety shoes.

b. Solvent drums taken into the spraying area shall be placed on nonferrous surfaces and shall be grounded. Metallic bonding shall be maintained between containers and drums when materials are being transferred.

c. Insulation on all power and lighting cables shall be inspected to ensure that the insulation is in excellent working condition and is free of all cracks and worn spots. Cables shall be further inspected to ensure that no connections are within 50 feet of the operation, that lines are not overloaded, and that they are suspended with sufficient slack to prevent undue stress or chafing.

1.7.6.4 Ignition Sources

Ignition sources, to include lighted cigarettes, cigars, pipes, matches, or cigarette lighters shall be prohibited in area of solvent cleaning, paint storage, paint mixing, or paint application.

1.7.6.5 Respirators

During all spray painting operations, spray painters shall use approved SCBA or SAR (air line) respirators, unless valid air sampling has demonstrated contaminant levels to be consistently within concentrations that are compatible with air-purifying respirator Assigned Protection Factor (APF). Persons with facial hair that interferes with the sealing surface of the facepiece to faceseal or interferes with respirator valve function shall not be allowed to perform work requiring respiratory protection. Air-purifying chemical cartridge/canister half- or full-facepiece respirators that have a particulate prefilter and are suitable for the specific type(s) of gas/vapor and particulate contaminant(s) may be used for nonconfined space painting, mixing, and cleaning (using solvents). These respirators may be used provided the measured or anticipated concentration of the contaminant(s) in the breathing zone of the exposed worker does not exceed the APF for the respirator and the gas/vapor has good warning properties or the respirator assembly is equipped with a NIOSH-approved end of service life indicator for the gas(es)/vapor anticipated or encountered. Where paint contains toxic elements such as lead, cadmium, chromium, or other toxic particulates that may become airborne during painting in nonconfined spaces, air-purifying half-and full-facepiece respirators or powered air-purifying respirators equipped with appropriate gas vapor cartridges, in combination with a high-efficiency filter, or an appropriate canister incorporating a high-efficiency filter, shall be used.

1.7.6.6 Protective Clothing and Equipment

All workers shall wear safety shoes or boots, appropriate gloves to protect against the chemical to be encountered, and breathable, protective, full-body covering during spray-painting applications. Where necessary for emergencies, protective equipment such as life lines, body harnesses, or other means of personnel removal shall be used during confined-space work.

1.8 MEDICAL STATUS

Prior to the start of work and annually thereafter, all Contractor employees working with or around paint systems, thinners, blast media, those required to wear respiratory protective equipment, and those who will be exposed to high noise levels shall be medically evaluated for

the particular type of exposure they may encounter. The evaluation shall include:

a. Audiometric testing and evaluation of employees who will work in the noise environments.

b. Vision screening (employees who use full-facepiece respirators shall not wear contact lenses).

c. Medical evaluation shall include, but shall not be limited to, the following:

(1) Medical history including, but not limited to, alcohol use, with emphasis on liver, kidney, and pulmonary systems, and sensitivity to chemicals to be used on the job.

(2) General physical examination with emphasis on liver, kidney, and pulmonary system.

(3) Determination of the employee's physical and psychological ability to wear respiratory protective equipment and to perform job-related tasks.

(4) Determination of baseline values of biological indices for later comparison to changes associated with exposure to paint systems and thinners or blast media, which include: liver function tests to include SGOT, SGPT, GGPT, alkaline phosphates, bilirubin, complete urinalysis, EKG (employees over age 40), blood urea nitrogen (bun), serum creatinine, pulmonary function test, FVC, and FEV, chest x-ray (if medically indicated), blood lead (for individuals where it is known there will be an exposure to materials containing lead), other criteria that may be deemed necessary by the Contractor's physician, and Physician's statements for individual employees that medical status would permit specific task performance.

(5) For lead-based paint removal, the medical requirements of 29 CFR 1926.62 shall also be included.

1.9 CHANGE IN MEDICAL STATUS

Any employee whose medical status has changed negatively due to work related chemical and/or physical agent exposure while working with or around paint systems and thinners, blast media, or other chemicals shall be evaluated by a physician, and the Contractor shall obtain a physicians statement as described in paragraph MEDICAL STATUS prior to allowing the employee to return to those work tasks. The Contractor shall notify the Contracting Officer in writing of any negative changes in employee medical status and the results of the physicians reevaluation statement.

1.10 DEFINITIONS AND NOMENCLATURE

1.10.1 Paint

The term "paint" as used herein includes emulsions, enamels, paints, stains, varnishes, sealers, and other coatings, organic or inorganic, whether they be used as prime, intermediate, or finish coats. This definition does not include troweled or sprayed-metal coatings.

1.10.2 Shop Painting

The term "shop painting" as referred to herein and/or on the drawings covers surface preparation and painting operations conducted in a shop,

mill, or plant, before shipment of paint-receiving items to the project site.

1.10.3 Field Painting

The term "field-painting" as referred to herein and/or on the drawings covers surface preparation and painting operations conducted at the project site.

1.10.4 Touch-up Painting

The term "touch-up painting" refers to the application of paint on small areas of painted surfaces to repair mars, scratches, and other defects where the coating has deteriorated in order to restore the coating to an unbroken condition.

1.10.5 Repainting

The term "repainting" designates the cleaning and recoating with the same or similar materials originally used on extensive areas on which the existing coatings have deteriorated or otherwise have not provided adequate protection.

1.11 SAMPLING AND TESTING

1.11.1 General

Batches of paint that the Contractor proposes to use shall be stored in an approved shelter on the project site or segregated at the source of supply sufficiently in advance of need to allow 45 days for sampling and testing. The Contractor shall notify the Contracting Officer when the paint is available for sampling. Sampling of each batch may be witnessed by the Government. Samples of paint submitted for approval shall be clearly labeled to indicate formula or specification number and nomenclature, batch number, batch quantity, color, date made, and applicable project contract number. Where specifically indicated herein or where indicated in a standards specification for a finished product, separate samples of ingredient materials shall be submitted. The ingredient samples shall be clearly identified by commercial name, trade designation, manufacturer, batch or lot number, and such other data as may be required. Testing of paint for compliance with the specifications will be performed in a Government designated laboratory at no expense to the Contractor except that the cost of testing any samples representing material that replaces previously rejected material will be deducted from payments to the Contractor at the rate of 300 dollars for each replacement sample.

1.11.2 Sampling

When the required amount of a material of a particular type or color is more than 50 gallons, the Contractor shall submit a one-quart sample of each batch he proposes to use. When the required quantity of any type is 50 gallons or less, he shall supply either of the following:

a. A certified test report showing the results of required tests made on the material and a statement that it meets all of the specification requirements.

b. A certified test report showing the results of required tests made on a previous batch of paint produced by the same firm using the same ingredients and formulation except for minor differences necessitated by a color change and a statement that the previous batch met all of the specification requirements. A report of tests on the proposed batch showing the following properties applicable to the

material specifications shall be submitted: color, gloss, drying time, opacity, viscosity, weight per gallon, and fineness of grind.

1.12 PACKAGING, LABELING, DELIVERY, AND STORAGE OF PAINTS

Paints shall be so processed and packaged as to ensure that within a period of one year from date of manufacture, they will not gel, liver or thicken deleteriously, or form gas in the closed container. Paints, unless otherwise specified or permitted, shall be packaged in standard containers not larger than five gallons in size, with removable friction or lug-type covers. Each container of paint or separately packaged component thereof shall be clearly and durably labeled to indicate the purchaser's order number, date of manufacture, manufacturer's batch number, quantity, color, component identification, and the designated name, formula or specification number of the paint together with special labeling instructions, when specified. Paint shall be delivered to the job in unbroken containers. Paints that can be harmed by exposure to cold weather shall be stored in ventilated, heated shelters. All paints shall be stored under cover from the elements and in locations free from sparks and flames.

PART 2 PRODUCTS

2.1 PAINTS TO BE APPLIED - NUMBER OF COATS AND FORMULAS

The following areas on the bridge crane shall be painted with System No. 16.

New material
New equipment that do not have factory finish paint coat
Areas on existing metal work and existing equipment where existing paint was disturbed/damaged during the course of the contract work
Areas where existing equipment was removed, showing prime paint or paint of a different color
New equipment with factory finish paint coating such as motors, reducers, cabinets, etc. and cable trays shall not be painted and shall be masked while painting surrounding areas
New conduit (without existing painted conduit as part of the conduit run) shall not be painted
New conduit (with existing painted conduit as part of the conduit run) and the existing conduit shall be painted

Paint shall be brush or roller applied to match existing color and lustre. **Dry blasting and spray painting at the project (inside the powerhouse) will not be permitted.** The method of surface preparation shown in the tabulation of paint systems is for identification purposes only. Cleaning of surfaces prior to painting shall be accomplished in accordance with detailed requirements of paragraph: CLEANING AND PAINTING.

System No. 16

Surface Preparation	Paint Formulas to be Applied 1st Coat	2nd Coat	3rd Coat
Power tool or Brush-off Blast Cleaning	SSPC Paint 25 Type I	CID A-A-2962 Type I Class A Grade C	CID A-A-2962 Type I Class A Grade C

Surfaces shall be coated with the system indicated. The first coat shall be brush or roller applied at a spreading rate not to exceed 600 square feet per gallon and touched up as required to maintain its integrity at all times. The second and third coats of the system shall be brush or roller applied at a minimum spreading rate of 500 square feet per gallon.

2.2 LABELING, DELIVERY, AND STORAGE OF PAINTS

Each container of paint or separately packaged component thereof shall be clearly and durably labeled to indicate the purchaser's order number, date of manufacture, manufacturer's batch number, quantity, color, component identification, and the designated name and formula or specification number of the paint together with special labeling instructions. Paint shall be delivered in unbroken containers. Paints that can be harmed by exposure to cold weather shall be stored in ventilated, heated shelters. All paints shall be stored under cover from the elements and in locations free from sparks and flames.

PART 3 EXECUTION

3.1 CLEANING AND PAINTING

3.1.1 Cleaning

After fabrication, all structural steel and unfinished surfaces of castings shall be thoroughly cleaned of all loose mill or foundry scale, weld spatter and of all rust, dirt, oil, grease, and other foreign substances. Oil and grease shall be removed by wiping with suitable solvents. After solvent cleaning, the surfaces shall be cleaned by means of power tools conforming to the requirements of SSPC-SP 3 or by dry blasting to the brush-off grade conforming to SSPS-SP 7. Nonferrous metals, corrosion resisting steel and surfaces in sliding or rubbing contact shall not be painted. Ferrous machine-finished surfaces which do not require painting and surfaces in bolted contact shall be protected as specified in SECTION 05101, paragraph: PROTECTION OF MACHINED SURFACES. Machinery units shall be shop finished in accordance with the manufacturer’s standard practice. Electrical equipment shall be touched-up or painted if required due to damage during the course of work or as otherwise determined necessary. **Dry blasting is not permitted at the project.**

3.1.2 Protection of Surfaces During Cleaning and Painting

Mask and protect items and materials such as machinery, name plates, identification labels, bearings, and shafting which would have their function and appearance degraded by paint to keep them free of paint. Should any paint be applied to such items, immediately and carefully remove it. Carefully protect items and materials which would be damaged by abrasive blasting and other surface preparation techniques, not only from direct blasting damage, but also from grit and dust associated with the process. Care shall be taken to avoid contamination of adjoining spaces, machinery, and equipment. Any material or equipment damaged by gritblasting shall be repaired or replaced.

3.1.3 Painting

Paint shall be applied only on surfaces that are thoroughly dry. All joints and crevices shall be filled where necessary and thoroughly coated. The temperature of the surface to be painted and the atmosphere shall be maintained at or above 50 F. Materials painted under cover in damp or cool weather shall remain under cover until dry. Surfaces which

do not require painting shall be masked or protected by other means during the painting of adjacent work. The material shall not be loaded for shipment until the paint is thoroughly dry. Painting materials shall not be laid on the ground. Care shall be used in handling painted material to avoid scraping or breaking the painted surfaces. Erection and field assembly marks shall be made on the painted surfaces. The finished coating shall be free from holidays, pinholes, bubbles, runs, drops, ridges, waves, laps, unnecessary brush marks, and variation in color, texture, and gloss. All paint coats shall be applied in such manner as to produce and even continuous film of uniform thickness. **Spray painting at the project is not permitted.**

3.2 DAMAGE PREVENTION

Welding on or in the vicinity of previously painted surfaces shall be conducted in a manner as to prevent weld spatter from striking the paint and to otherwise reduce coating damage to a minimum. Paint damaged by welding or other operations shall be restored to its original condition. The coating shall be completely cured prior to attaching slings or other handling devices.

3.3 TOUCH-UP PAINTING

Damage areas of the shop coatings due to handling, transporting, erection, or other causes shall be touch up painted in the field. All existing areas to be repaired shall be examined for the presence of red lead paint if red lead paint is present the Contractor must comply with the procedures in accordance with these specifications. Touch up painting shall conform with the same requirements as shop painting. Touch up painting shall be performed so that the paint finish and color matches surrounding surfaces or that the whole surface is repainted.

3.4 CONTRACTOR'S QUALITY CONTROL (CQC)

In conjunction with SECTION 01451, CQC for all operations shall include but not be limited to the following:

a. Materials meet the specified requirements.

b. Surfaces have been cleaned and prepared.

c. Application of each type of material is as specified.

d. Materials are stored as recommended by the paint manufacturer and as specified.

e. Surfaces receive the number of coats specified.

A copy of records and tests, as well as the records of corrective action taken, shall be furnished as herein before specified.

END OF SECTION 09900

SECTION 15000WC

MECHANICAL
WOLF CREEK

TABLE OF CONTENTS

PART 1 GENERAL

1.1 GENERAL INFORMATION
1.2 REFERENCES
1.3 SUBMITTALS

PART 2 PRODUCTS

2.1 SHAFT COUPLINGS
2.2 GEARS AND SPEED REDUCERS
2.3 AUXILIARY HOIST REDUCERS
2.4 BEARINGS
2.5 SHAFTING
2.6 KEYS AND KEYSEATS
2.7 LUBRICATION
2.8 GUARDS, COVERS, AND DRIP PANS
2.9 WIRE ROPE

PART 3 EXECUTION

3.1 MAIN HOISTS
3.2 AUXILIARY HOISTS
3.3 TROLLEY DRIVES
3.4 BRIDGE DRIVES
3.5 LIFTING BEAM INSPECTION

SECTION 15000WC

MECHANICAL
WOLF CREEK

PART 1 GENERAL

1.1 GENERAL INFORMATION

This section covers the mechanical work for the rehabilitation of the 250 ton bridge crane at Wolf Creek Project. Computations for mechanical components shall be furnished. Detailed shop drawings shall be furnished showing all details required to install mechanical equipment. See SECTION 01600 for inspection and cleaning requirements. See SECTION 05502 for mechanical products.

1.2 REFERENCES

The publications listed below form a part of this specification to the extent referenced. The publications are referenced to in the text by basic designation only.

AMERICAN BEARING MANUFACTURERS ASSOCIATION, INC (ABMA)

ABMA 8.2	(1999) Ball and Roller Bearing Mounting Accessories Inch Design
ABMA 19.1	(1987, Rev 1993) Tapered Roller Bearings Radial Metric Design
ABMA 19.2	(1994) Tapered Roller Bearings Inch Design
ABMA 20	(1996) Radial Bearings of Ball, Cylindrical Roller and Spherical Roller Types – Metric Design

AMERICAN GEAR MANUFACTURERS ASSOCIATION (AGMA)

AGMA 2001-C	(1995) Fundamental Rating Factors & Calculation Methods for Involute Spur and Helical Gear Teeth
AGMA 6010-F	(1997) Standard for Spur, Helical, Herringbone and Bevel Enclosed Drives

AMERICAN SOCIETY OF MECHANICAL ENGINEERS (ASME)

ASME B15.1	(2000) Standard for Mechanical Power Transmission Apparatus, Safety
ASME B17.1	(1967, Rev 1998) Keys and Keyseats

AMERICAN SOCIETY FOR TESTING AND MATERIALS (ASTM)

ASTM B22	(2002) Bronze Castings for Bridges and Turntables

FEDERAL SPECIFICATIONS (FS)

FS RR-W-410	Wire Rope and Strand

SOCIETY OF AUTOMOTIVE ENGINEERS, INC. (SAE)

SAE J-462 (1981) Copper Based Casting Alloys, Alloy Numbers 64 and 660

U.S. ARMY CORPS OF ENGINEERS (USACE)

EM 385-1-1 (2003) Safety and Health Requirement Manual

1.3 SUBMITTALS

Submittals required by this section of the Technical Specifications shall be for Government approval (GA) or for information only (FIO), and shall be submitted as stated below in accordance with SECTION H.

SD-01 Data

Descriptive Data; GA

Complete descriptive data, catalog cuts, detailed drawings, parts list, and other data for all components furnished shall be submitted.

Computations; GA

Computations for couplings, speed reducers, gears, bearings, shafting, keys, pins, drums and brakes shall be submitted.

SD-04 Drawings

Drawings; GA

a. Dimensioned outline drawings for each hoist machinery, trolley drive machinery, and bridge drive machinery.

b. Detail drawings showing all details required for a complete installation of hoist machinery, trolley drive machinery, and bridge drive machinery.

PART 2 PRODUCTS

2.1 SHAFT COUPLINGS

2.1.1 Flexible Couplings

Flexible couplings shall be capable of developing the full strength of the shafting which they connect and shall be pressed and keyed thereon. In determining the coupling capacity, the manufacturer’s published rating shall be divided by a service factor of 1.5 or factor recommended by manufacturer whichever is greater. Couplings shall be forged steel and shall transmit torque by means of external gears on hubs engaging in internal gears on the coupling sleeves. Sleeves shall be fastened so that they cannot work or slip off. Couplings with sleeves held in place or retained by snap rings will not be permitted. Couplings shall be enclosed and sealed to retain the lubricant and shall be oil tight under both static and operating conditions. A flexible coupling shall be provided at each motor except for the trolley drive motors. Motor and reducer shafts shall extend all the way through the coupling halves. Brake wheels shall not be used in lieu of couplings.

2.1.2 Rigid Couplings

Rigid couplings shall be made of cast or forged steel and shall be of the flanged or compression type with recessed bolts. Couplings shall be capable of developing the full strength of the shafting which they connect and shall be keyed to the shafting. Rigid plate guards shall be provided for all couplings. Motor and reducer shafts shall extend all the way through the coupling halves. Brake wheels shall not be used in lieu of couplings.

2.2 GEARS AND SPEED REDUCERS

2.2.1 General

Speed reducers shall be in accordance with AGMA 6010. Gears for final reductions shall be of the spur or helical type in accordance with AGMA 2001.

2.2.2 Gears

In calculating the durability rating of gears, a value of not less than 1.0 shall be used for the overload factor, size factor, surface condition factor, factor of safety and temperature factor, and a value of 1.0 shall be used for the life factor. The durability rating of gears shall based on not less than 0.8 of the tangential load produced at rated horsepower output of the motor. In calculating the strength rating of gears, a value of not less than 1.0 shall be used for the overload factor, size factor, surface condition factor, factor of safety (fatigue strength) and temperature factor, and a value of 1.0 shall be used for the life factor. A value of 70 percent of the allowable fatigue or bending design stress shall be used for gears for the trolley and bridge drives and other gears which are subject to reverse loading. In addition, the gears shall be designed such that the bending stress produced by the rated torque (factory adjusted torque setting) of the brakes will not exceed 50 percent of the yield point of the material. Also, the gears shall be designed such that the bending stress produced by the maximum torque of the motor will not exceed 75 percent of the yield point of the material. The materials yield points used shall be the allowable yield strength of the materials given in AGMA 2001 and AGMA 6010, except that for surface hardened gears the yield point shall be that of the base material. Gears shall be cut from solid metal to tolerances equal to or better than AGMA Quality Number 6 overhung gears or pinions will not be permitted except for spiral bevel pinions in speed reducers. Pinions shall be forged integral with the shaft where practicable. Gears shall be pressed or shrunk on the shaft and provided with standard rectangular keys. Gears may be cast steel, steel welded and annealed, or forged steel. Welding or defective gear teeth shall not be permitted.

2.2.3 Speed Reducers

Speed reducers shall be of the right angle bevel - helical gear type or parallel shaft type entirely self contained in an oil tight, steel or cast-iron housing designed to maintain shafts and bearings in accurate alignment. The pitch line velocity of spur gears shall not exceed 760 feet per minute at rated load and speed. Speed reducers shall be a standard catalog product of a speed reducer manufacture with special shafts to suit. The rating of standard speed reducers shall be based on the catalog rating of the speed reducer. Catalog rated speed reducers shall have a service factor of not less than 1.5. Rating of the speed reducer shall be based on the rated horsepower output of the motor or on the full load torque of the motor, depending on the operating speed, taking into account the friction losses in the machinery connecting the motor to the respective speed reducer. In addition, the speed reducer

shall be sized such that the rated torque (factory torque setting) of the brake will not exceed the catalog torque rating of the speed reducer. Bearings shall be of anti-friction type. Provisions shall be made for adequate lubrication of all gears and bearings throughout the range of operating speeds. Vertical reducers shall be provided with positive displacement oil pump to lubricate the upper gears and bearings. The pump shall be mounted external to the reducer and shall have pressure gage discharge side. Each reducer shall be provided with a permanently attached nameplate containing the following information: The name of the manufacturer, the reduction ratio, the rated capacity, speed, the service rating or service class. All speed reducers shall be held securely in place by one of the following methods:

a. Fitted bolts installed with plain washers and double nuts.

b. Machine bolts and dowels. The dowels shall be of such size as to adequately locate the device and resist the total shearing forces.

The bolts shall be installed with nuts and lockwashers. Shear bars will not be allowed.

2.3 AUXILIARY HOIST DRUMS

2.3.1 Hoist Drums

The hoist drums shall be made of welded steel plate, or seamless steel tubing and shall be stress-relief annealed. Drum grooves shall be turned from the solid and shall be right-hand for one rope and left-hand for the other. Grooves shall be smooth and well rounded and shall have a depth approximately 35 percent of the rope diameter, a pitch of not less than 1.2 times the rope diameter and a radius of 1/32 inch larger than the rope radius. All rope required for the full lift shall be contained on the drum in one layer. All drums shall be so designed that one unused groove for each rope shall remain on the drum when the lifted load is at its highest position, and no less than two complete wraps of each rope plus the rope used for the end tie will remain on the drum when the load is being lifted is at its lowest position. The rope attachment to the drums shall be simple and secure so that adjustment and replacement of rope may be accomplished without dismantling the parts. The pitch diameter of the drums shall not be less than 24 times the diameter of the rope.

2.3.2 Drum Stresses

The combined bending and crushing stress for the drums shall not exceed 12,000 psi at rated loads, and in addition, the stresses in the drums shall not exceed 90 percent of the yield point of the material with loads resulting from the maximum torque of the motor.

2.4. BEARINGS

2.4.1 General

Except where otherwise specified, bearings may be of the roller, ball, or sleeve type. Bearings shall be so designed as to be easily replaceable and shall be placed as close as possible to the points of loading where feasible, bearing bases for gear trains shall be made in one piece to ensure that alignment and spacing will be maintained. Where welded construction is employed for bearing housing assemblies or pedestals, the weldments shall be stress relieved. Bearing fits shall be as recommended by the manufacturer for the application. Bearing bases and pillow blocks shall have solid bases and shall be held securely in place by one of the following methods:

a. Fitted bolts installed with plain washers and double nuts.

b. Machine bolts and dowels. The dowels shall be of such size as to adequately locate the device and resist the total shearing forces.

The bolts shall be installed with nuts and lockwashers. Shear bars will not be allowed. Pillow blocks with hollow bases will not be allowed.

2.4.2 Sleeve-Type

Sleeve-type bearings shall have removable bronze linings flanged at the ends where required for thrust or axial alignment and shall conform to ASTM B 22, Alloy C, or SAE Alloy Nos. 64 or 660. Unless otherwise specified herein, bearings on revolving shafts shall be of the divided type, designed so that each shaft may be removed from the crane with its pinions and gears in position. Provision shall be made for holding linings effectively against rotation or changing of position under load. Linings, thrust washers, and bushings shall be grooved, if necessary, for satisfactory distribution of the lubricant. The edges of the grooves shall be rounded and the ends of the grooves shall be not less than 1/8 inch from the ends of the bearing. The bearing pressure of bronze lining shall be limited to a maximum value to 1,300 psi, and in addition, the area of the bearing shall be such that the product of the bearing pressure in psi and the square root of the rubbing velocity in feet per second shall not exceed 900. The thickness of bronze linings shall not be less than given in the following tabulation:

SHAFT DIAMETER (inches)	LINING THICKNESS (inches)
Less than (2-1/2)	1/8
2-1/2 TO 4	1/4
4 TO 5-1/2	3/8
5-1/2 TO 7	1/2
7 TO 8	5/8

2.4.3 Antifriction

Antifriction bearings shall be of standard types most suitable for the respective application and shall have both inner and outer races. Ball and roller bearings shall conform to the applicable requirements of the ABMA 19.1, 19.2 and 20. The manufacturer's published ratings shall be used in determining the bearing capacity. Fixed bearings shall be secured against a shaft shoulder by means of a locknut and bearing lockwasher as described in ABMA 8.2. Floating bearings shall be secured against a shaft shoulder by means of a retaining ring or locknut and lockwasher, except that floating bearings at intermediate points on long shafts may be secured with a tapered sleeve and locknut and lockwasher. Bearings, except as noted below, shall have a L-10 life of 5,000 hours and shall be designed for the loads and speeds resulting from the crane performance specified in SECTION 01600. For wheel bearings, one bearing on each wheel axle shall be of the fixed double-thrust type. The other bearing shall be arranged to allow for expansion or float of the axle. On other bearings where thrust occurs, unless the design is such that the thrust on a bearing can be determined, the full thrust load shall be added to each bearing on the shaft or axle. Bearings shall have oiltight enclosures and, except for sheave bearings, shall have double lipped seals; a synthetic rubber spring loaded element to retain the grease and another synthetic rubber element to exclude foreign matter.

2.5 SHAFTING

2.5.1 General

Shafting except for those in speed reducers which are a standard catalog item shall be designed to provide factors of safety not less than 5 with loads increased by the applicable shock factors. A combined shock and fatigue factor of 1.25 shall be used for hoist or other nonreversing loads and 1.75 for trolley drives, bridge drives, or similar reversing loads. Shafting in speed reducers which are standard catalog items shall conform to the requirements of paragraph 2.2.

2.5.2 Support

Shafting shall be amply supported and provided with adequate means to prevent longitudinal movement. Torsional shaft deflection shall not exceed 0.08 degrees per foot of shaft length at rated load. Shafting of non-uniform diameter shall be made of hot-rolled steel, shall be turned with fillets of not less than 1/4 inch radius where changes of section occur, and shall be polished at the bearings and seals. Plain shafting 6 inches and smaller in diameter may be made of cold-finished steel. Shaft fillet radii at bearings shall be the maximum size recommended by the bearing manufacturer for the bearing being used.

2.6 KEYS AND KEY SEATS

Keys and keyseats shall conform to ASME B17.1.

2.7 LUBRICATION

Oil lubrication shall be provided for gear trains, gear- or grid-type couplings, and speed reducers except that grease lubrication will be acceptable for drum gears and the final bridge drive on the trolley and gantry wheels. Lubrication for other mechanical operating parts shall be by means of high-pressure grease, and industrial button-type fittings shall be used. The lubricating fittings of journals or bearings shall be readily accessible and where necessary shall be piped to convenient points using copper or brass pipe of ample size, adequately fastened with grommets and clamps to prevent vibration during gantry operations. Drain and fill plugs of speed reducers and gear cases shall be located so as to be readily accessible and shall be provided with extension piping where required. Lubricants shall be identical to what is currently used at the project. If the Contractor wishes to use an “or equal” product, he shall furnish data showing that his proposed “or equal” product is compatible with the lubricants currently used at the project.

2.8 GUARDS, COVERS, AND DRIP PANS

Safety guards shall be provided throughout the crane where necessary for protection of operators or others from injury. Couplings, shafts, projecting set screws, keys, and similar rotating parts shall be provided with metal guards in accordance with the applicable requirements of ASME B15.1. Wires or other parts carrying current at any time shall be adequately guarded to prevent persons or equipment from coming in contact with live parts. Suitable drip pans made of steel plate shall be provided to collect oil and grease which may drip from operating parts (new and existing). Drip pans shall be removable for cleaning without dismantling of equipment.

2.9 WIRE ROPE

Wire rope shall conform to the requirements of Fed. Spec. RR-W-410, Type I, Class 2, 6 x 37, construction optional, improved or extra improved

plow steel, preformed, regular lay, uncoated, independent wire rope core.

PART 3 EXECUTION

3.1 MAIN HOISTS

3.1.1 General

Existing motors, brakes, reducers, couplings, and wire rope shall be replaced as shown. Existing brake shoes contain asbestos and shall be disposed of in accordance with SECTIONS 02080 and 02120. Work on other components is specified below.

3.1.2 Main Hoist Pinions and Bull Gears

The pinion and gear of the number 1 main hoist shall be replaced. The top portion of the final gear case of number 2 main hoist shall be removed for inspection of the gear. The pinion and bull gear for the number 2 main hoist shall be cleaned and inspected within 7 days after the crane has been taken out of service for rehabilitation work. Gear inspection findings shall be submitted. The new gear set for number 1 main hoist shall have identical gear ratio as existing.

3.1.3 Main Hoist Gear Reducers

New gear reducers shall be furnished as shown to replace the existing reducers. Reduction ratio shall be 160:1. The reducers may require custom shafts to accommodate the pinions and the new brake wheel/couplings. The reducer shafts shall be stiff enough not to cause excessive gear misalignment. The pinion of number 2 main hoist shall be removed from the existing reducer shaft and installed on the new reducer shaft. New outboard bearings and supports shall be furnished. Reducers shall be aligned such that misalignment between the pinion on the reducer output shaft and the mating bull gear does not exceed 0.0008 inch per inch of tooth face at all load conditions.

3.1.4 Mounting Bases

New mounting bases shall be one weldment for mounting of the motor, reducer, and brakes. The mounting bases shall be welded directly to the existing mounting plate and/or trolley structure, not to the checkered floorplate. Unused existing mounting bases and unused portions of existing mounting bases shall be removed flush with the trolley frame and ground smooth.

3.1.5 Miscellaneous Items

Miscellaneous items such as bolts for replaced components, keys, grease fittings, grease line tubing, spiral pins, snap rings, etc. shall be replaced with new during rebuilding/reassembling of components.

3.1.6 Wire Rope

New wire rope shall be provided.

3.1.7 Sheaves

Sheaves shall be inspected, including checking that they turn freely. All sheave grooves (for sheaves in load blocks and upper blocks) shall be cleaned and inspected (see SECTION 01600). Dismantling load blocks and upper blocks is not required.

3.2 AUXILIARY HOISTS

3.2.1 General.

Existing motors, brakes, reducers, drums, drum bearings and supports, wire rope, and couplings shall be replaced as shown. The auxiliary hoist shall be designed, utilizing existing components that will not be replaced. The speed and capacity of the hoist shall be 25 FPM at 25 tons and at 50 FPM at no load. Existing brake shoes contain asbestos and shall be disposed of in accordance with SECTIONS 02080 and 02120. Work on other components is specified below.

3.2.2 Auxiliary Hoist Gear Reducers

New gear reducers shall be furnished as shown to replace the existing reducers. The reducers may require custom shafts to accommodate the new drum couplings and the new brake wheel/couplings.

3.2.3 Mounting Bases

New mounting bases shall be one weldment for mounting of the motor and brakes. The mounting bases shall be welded directly to the existing mounting plate and/or trolley structure, not to the checkered floorplate. Unused existing mounting bases and unused portions of existing mounting bases shall be removed flush with the trolley frame and ground smooth. The trolley frame shall be modified to provide a mounting base for the drum bearing support nearest to the reducer.

3.2.4 Miscellaneous Items

Miscellaneous items such as bolts for replaced components, keys, grease fittings, grease line tubing, spiral pins, snap rings, etc. shall be replaced with new during replacing/rebuilding/reassembling of components.

3.2.5 Wire Rope

New wire rope shall be provided.

3.2.6 Sheaves

Sheaves shall be inspected, including checking that they turn freely. All sheave grooves (for sheaves in load blocks and upper blocks) shall be cleaned and inspected (see SECTION 01600). Dismantling load blocks and upper blocks is not required.

3.3 TROLLEY DRIVES

3.3.1 General

Existing motors and brakes shall be replaced with new as shown. The existing pinion shall be removed from the existing motor and mounted on the new motor and the motor shaft shall go all the way through the pinion. An adaptor shall be furnished to mount the C-face of the motor to the reducer. Existing brake shoes contain asbestos and shall be disposed of in accordance with SECTIONS 02080 and 02120.

3.3.2 Reducer

Reducers for the trolley drive shall be inspected. Oil shall be drained and discarded. Sludge and debris inside the reducer shall be removed. Gears, shafting, and gearcases shall be inspected. Provide new seals for gear reducers and couplings.

3.3.3 Mounting Base

New mounting bases shall be one weldment for mounting of the motor. The mounting bases shall be welded directly to the existing mounting plate and/or trolley structure, not to the checkered floorplate. Unused existing mounting bases and unused portions of existing mounting bases shall be removed flush with the trolley frame and ground smooth.

3.3.4 Miscellaneous Items

Miscellaneous items such as bolts for replaced components, keys, grease fittings, grease tubing, spiral pins, snap rings, etc. shall be replaced with new during rebuilding/reassembling of components.

3.3.6 Wheel Truck Assembly

Wheel trucks, wheels, axles, gears, and shafting shall be cleaned and inspected without disassembling the wheel truck assembly.

3.4 BRIDGE DRIVES

3.4.1 General

Existing motors, brakes and motor couplings shall be replaced with new as shown. All hydraulic brake components such as cylinders, tubing, controls, levers, etc. shall be removed and discarded. Existing brake shoes contain asbestos and shall be disposed of in accordance with SECTIONS 02080 and 02120.

3.4.2 Reducers

Reducers for the bridge drives shall be inspected. Oil shall be drained and discarded. Sludge and debris inside the reducer shall be removed. Gears, shafting, and gearcases shall be inspected. After inspection, reducers shall be refilled with oil. Provide new seals for gear reducers and couplings.

3.4.3 Mounting Base

New mounting bases shall be one weldment for mounting of the motor and brake. The mounting bases shall be welded directly to the existing mounting plate and/or bridge drive structure, not to the checkered floorplate. Unused existing mounting bases and unused portions of existing mounting bases shall be removed flush with the walkway floor and ground smooth.

3.4.4 Wheel Truck Assembly

Wheel trucks, pins, wheels, axles, bearings, and shafting shall be cleaned and inspected without disassembling the wheel truck assembly.

3.4.7 Miscellaneous Items

Miscellaneous items such as bolts for replaced equipment, keys, grease fittings, grease tubing, spiral pins, snap rings, etc. shall be replaced with new during rebuilding/reassembling of components.

3.5 LIFTING BEAM INSPECTION

The 250 ton lifting beam shall be cleaned and inspected. This work may be performed on site where the lifting beam is normally stored.

END OF SECTION 15000WC

SECTION 15000CH

MECHANICAL
CENTER HILL

TABLE OF CONTENTS

PART 1 GENERAL

1.1 GENERAL INFORMATION
1.2 REFERENCES
1.3 SUBMITTALS

PART 2 PRODUCTS

2.1 SHAFT COUPLINGS
2.2 BEARINGS
2.3 KEYS AND KEYSEATS
2.4 WIRE ROPE

PART 3 EXECUTION

3.1 MAIN HOISTS
3.2 AUXILIARY HOISTS
3.3 TROLLEY DRIVES
3.4 BRIDGE DRIVES
3.5 LIFTING BEAM INSPECTION

SECTION 15000CH

MECHANICAL
CENTER HILL

PART 1 GENERAL

1.1 GENERAL INFORMATION

This section covers the mechanical work for the rehabilitation of the 250 ton bridge crane at Center Hill Project. The following work shall be completed; the existing motors and brakes shall be removed and replaced, the load brakes for both the main and auxiliary hoist shall be modified to transmit torque and no longer function as a load brake, the trolley drive motors shall be removed and replaced, the bridge drive motors and brakes shall be replaced, and the bridge drive shall be repaired to prevent its axial floating. See SECTION 01600 for inspection and cleaning requirements. See SECTION 05502 for mechanical products.

1.2 REFERENCES

The publications listed below form a part of this specification to the extent referenced. The publications are referenced to in the text by basic designation only.

AMERICAN BEARING MANUFACTURERS ASSOCIATION, INC (ABMA)

ABMA 8.2	(1999) Ball and Roller Bearing Mounting Accessories Inch Design
ABMA 19.1	(1987, Rev 1993) Tapered Roller Bearings Radial Metric Design
ABMA 19.2	(1994) Tapered Roller Bearings Inch Design
ABMA 20	(1996) Radial Bearings of Ball, Cylindrical Roller and Spherical Roller Types - Metric Design

AMERICAN SOCIETY OF MECHANICAL ENGINEERS (ASME)

ASME B15.1	(2000) Standard for Mechanical Power Transmission Apparatus, Safety
ASME B17.1	(1967, Rev 1998) Keys and Keyseats

AMERICAN SOCIETY FOR TESTING AND MATERIALS (ASTM)

ASTM B22	(2002) Bronze Castings for Bridges and Turntables

FEDERAL SPECIFICATIONS (FS)

FS RR-W-410	Wire Rope and Strand

SOCIETY OF AUTOMOTIVE ENGINEERS, INC. (SAE)

SAE J-462	(1981) Copper Based Casting Alloys, Alloy Numbers 64 and 660

EM 385-1-1 (2003) Safety and Health Requirement Manual

1.3 SUBMITTALS

Submittals required by this section of the Technical Specifications shall be for Government approval (GA) or for information only (FIO), and shall be submitted as stated below in accordance with SECTION 01330.

SD-01 Data

Descriptive Data; GA

Complete descriptive data, catalog cuts, detailed drawings, parts list, and other data for all components furnished shall be submitted.

Computations; GA

Computations for couplings, bearings, keys, pins, and brakes shall be submitted.

SD-04 Drawings

Drawings; GA

a. Dimensioned outline drawings for each hoist machinery, trolley drive machinery, and bridge drive machinery.

b. Detail drawings showing all details required for a complete installation of hoist machinery, trolley drive machinery, load brake, and bridge drive machinery.

c. Load brake modification details.

PART 2 PRODUCTS

2.1 SHAFT COUPLINGS

2.1.1 Flexible Couplings

Flexible couplings shall be capable of developing the full strength of the shafting which they connect and shall be pressed and keyed thereon. In determining the coupling capacity, the manufacturer's published rating shall be divided by a service factor of 1.5 or factor recommended by manufacturer whichever is greater. Couplings shall be forged steel and shall transmit torque by means of external gears on hubs engaging in internal gears on the coupling sleeves. Sleeves shall be fastened so that they cannot work or slip off. Couplings with sleeves held in place or retained by snap rings will not be permitted. Couplings shall be enclosed and sealed to retain the lubricant and shall be oil tight under both static and operating conditions. A flexible coupling shall be provided at each motor except for the bridge drive motors. Motor and reducer shafts shall extend all the way through the coupling halves. Brake wheels shall not be used in lieu of couplings.

2.1.2 Rigid Couplings

Rigid couplings shall have taper lock bushings on both hubs, shall be made of cast or forged steel, and shall be of the flanged or compression type with recessed bolts. Couplings shall be capable of developing the full strength of the shafting which they connect and shall be keyed to the shafting. Rigid plate guards shall be provided for all couplings. Motor and reducer shafts shall extend all the way through the coupling halves. Brake wheels shall not be used in lieu of couplings.

2.2. BEARINGS

2.2.1 General

Except where otherwise specified, bearings may be of the roller, ball, or sleeve type. Bearings shall be so designed as to be easily replaceable and shall be placed as close as possible to the points of loading where feasible, bearing bases for gear trains shall be made in one piece to ensure that alignment and spacing will be maintained. Where welded construction is employed for bearing housing assemblies or pedestals, the weldments shall be stress relieved. Bearing fits shall be as recommended by the manufacturer for the application. Bearing bases and pillow blocks shall have solid bases and shall be held securely in place by one of the following methods:

a. Fitted bolts installed with plain washers and double nuts.

b. Machine bolts and dowels. The dowels shall be of such size as to adequately locate the device and resist the total shearing forces.

The bolts shall be installed with nuts and lockwashers. Shear bars will not be allowed. Pillow blocks with hollow bases will not be allowed.

2.2.2 Antifriction

Antifriction bearings shall be of standard types most suitable for the respective application and shall have both inner and outer races. Ball and roller bearings shall conform to the applicable requirements of the ABMA 19.1, 19.2 and 20. The manufacturer's published ratings shall be used in determining the bearing capacity. Fixed bearings shall be secured against a shaft shoulder by means of a locknut and bearing lockwasher as described in ABMA 8.2. Floating bearings shall be secured against a shaft shoulder by means of a retaining ring or locknut and lockwasher, except that floating bearings at intermediate points on long shafts may be secured with a tapered sleeve and locknut and lockwasher. Bearings, except as noted below, shall have a L-10 life of 5,000 hours and shall be designed for the loads and speeds resulting from the crane performance specified in SECTION 01600. For wheel bearings, one bearing on each wheel axle shall be of the fixed double-thrust type. The other bearing shall be arranged to allow for expansion or float of the axle. On other bearings where thrust occurs, unless the design is such that the thrust on a bearing can be determined, the full thrust load shall be added to each bearing on the shaft or axle. Bearings shall have oiltight enclosures and, except for sheave bearings, shall have double lipped seals; a synthetic rubber spring loaded element to retain the grease and another synthetic rubber element to exclude foreign matter. foreign matter.

2.3 KEYS AND KEY SEATS

Keys and keyseats shall conform to ASME B17.1.

2.4 WIRE ROPE

Wire rope shall conform to the requirements of Fed. Spec. RR-W-410, Type I, Class 2, 6 x 37, construction optional, improved or extra improved plow steel, preformed, regular lay, uncoated, independent wire rope core.

PART 3 EXECUTION

3.1 MAIN HOISTS

3.1.1 General

Existing motors, brakes, couplings, and wire rope shall be replaced. Existing brake shoes contain asbestos and shall be disposed of in accordance with SECTIONS 02080 and 02120. Work on other components is specified below.

3.1.2 Mounting Bases

New mounting bases shall be one weldment for mounting of the motor, reducer, and brakes. The mounting bases shall be welded directly to the existing mounting plate and/or trolley structure, not to the checkered floor plate. Unused existing mounting bases and unused portions of existing mounting bases shall be removed flush with the trolley frame and ground smooth.

3.1.3 Miscellaneous Items

Miscellaneous items such as bolts for replaced components, keys, grease fittings, grease line tubing, spiral pins, snap rings, etc. shall be replaced with new during rebuilding/reassembling of components.

3.1.4 Wire Rope

New wire rope shall be provided.

3.1.5 Sheaves

Sheaves shall be inspected, including checking that they turn freely. All sheave grooves (for sheaves in load blocks and upper blocks) shall be cleaned and inspected (see SECTION 01600). Dismantling load blocks and upper blocks is not required.

3.1.6 Load Brake Modification

The load brakes shall be modified to transmit torque and no longer act as a load brake. The load brake cooling equipment shall be removed. Details of load brake modification shall be submitted for approval.

3.1.7 Main Hoist Pinions and Bull Gears Alignment

Alignment shall be checked at full load with bluing compound. Alignment of the gears shall obtain a minimum of 70% contact pattern across the face of the gear and pinion. Tapered dowel pins shall be installed to maintain alignment. Pinions and bull gears for the main hoists shall be cleaned, inspected, and realigned. The top gear guard sections shall be removed for inspection and cleaning of the pinions and bull gears.

3.1.8 Main Hoist Gear Reducers

All components of the gear reducer shall be completely cleaned and inspected. All debris and sludge inside the gear reducer shall be

removed and the gear reducer interior shall be wiped clean. New seals shall be provided.

3.2 AUXILIARY HOISTS

3.2.1 General.

Existing motors, brakes, reducers, drums, drum bearings and supports, wire rope, and couplings shall be replaced as shown. The auxiliary hoist shall be designed, utilizing existing components that will not be replaced. The speed and capacity of the hoist shall be 25 FPM at 25 tons and at 50 FPM at no load. Existing brake shoes contain asbestos and shall be disposed of in accordance with SECTIONS 02080 and 02120. Work on other components is specified below.

3.2.2 Mounting Bases

New mounting bases shall be one weldment for mounting of the motor and brakes. The mounting bases shall be welded directly to the existing mounting plate and/or trolley structure, not to the checkered floorplate. Unused existing mounting bases and unused portions of existing mounting bases shall be removed flush with the trolley frame and ground smooth. The trolley frame shall be modified to provide a mounting base for the drum bearing support nearest to the reducer.

3.2.3 Miscellaneous Items

Miscellaneous items such as bolts for replaced components, keys, grease fittings, grease line tubing, spiral pins, snap rings, etc. shall be replaced with new during replacing/rebuilding/reassembling of components.

3.2.4 Wire Rope

New wire rope shall be provided.

3.2.5 Sheaves

Sheaves shall be inspected, including checking that they turn freely. All sheave grooves (for sheaves in load blocks and upper blocks) shall be cleaned and inspected (see SECTION 01600). Dismantling load blocks and upper blocks is not required.

3.2.6 Load Brake Modification

The load brakes shall be modified to transmit torque and no longer act as a load brake. The load brake cooling equipment shall be removed. Details of load brake modification shall be submitted for approval.

3.3 TROLLEY DRIVES

3.3.1 General

Existing motors and brakes shall be replaced with new as shown. Existing brake shoes contain asbestos and shall be disposed of in accordance with SECTIONS 02080 and 02120.

3.3.2 Reducer

Reducers for the trolley drive shall be inspected. Oil shall be drained and discarded. Sludge and debris inside the reducer shall be removed. Gears, shafting, and gear cases shall be inspected. Provide new seals for gear reducers and couplings.

3.3.3 Mounting Base

New mounting bases shall be one weldment for mounting of the motor. The mounting bases shall be welded directly to the existing mounting plate and/or trolley structure, not to the checkered floor plate. Unused existing mounting bases and unused portions of existing mounting bases shall be removed flush with the trolley frame and ground smooth.

3.3.4 Miscellaneous Items

Miscellaneous items such as bolts for replaced components, keys, grease fittings, grease tubing, spiral pins, snap rings, etc. shall be replaced with new during rebuilding/reassembling of components.

3.3.5 Wheel Truck Assembly

Wheel trucks, wheels, axles, gears, and shafting shall be cleaned and inspected without disassembling the wheel truck assembly.

3.4 BRIDGE DRIVES

3.4.1 General

On the two (2) bridge drives, existing motors, brakes, bearings and motor couplings shall be replaced with new. All hydraulic brake components such as cylinders, tubing, controls, levers, etc. shall be removed and discarded. Existing brake shoes contain asbestos and shall be disposed of in accordance with SECTIONS 02080 and 02120.

3.4.2 Bearings

Remove existing bearings and replace with 1 nonexpansion and 2 expansion bearings. The replacement bearings shall be the same size or smaller than the existing bearings. If the bearings are smaller than the existing bearings they shall be raised with an expansion piece.

3.4.3 Couplings

Existing couplings shall be removed and discarded. The couplings shall be replaced with rigid couplings with taper lock hubs.

3.4.4 Reducers

Reducers for the bridge drives shall be inspected. Oil shall be drained and discarded. Sludge and debris inside the reducer shall be removed. Gears, shafting, and gearcases shall be inspected. After inspection, reducers shall be refilled with oil. Provide new seals for gear reducers and couplings.

3.4.5 Mounting Base

New mounting bases shall be one weldment for mounting of the motor and brake. The mounting bases shall be welded directly to the existing mounting plate and/or bridge drive structure, not to the checkered floorplate. Unused existing mounting bases and unused portions of existing mounting bases shall be removed flush with the walkway floor and ground smooth.

3.4.6 Wheel Truck Assembly

Wheel trucks, pins, wheels, axles, bearings, and shafting shall be cleaned and inspected without disassembling the wheel truck assembly.

3.4.7 Miscellaneous Items

Miscellaneous items such as bolts for replaced equipment, keys, grease fittings, grease tubing, spiral pins, snap rings, etc. shall be replaced with new during rebuilding/reassembling of components.

3.5 LIFTING BEAM INSPECTION

The 250 ton lifting beam shall be cleaned and inspected. This work may be performed on site where the lifting beam is normally stored.

END OF SECTION 15000CH

SECTION 16050WC

ELECTRICAL WORK AND EQUIPMENT
WOLF CREEK

TABLE OF CONTENTS

PART 1 GENERAL

1.1 DESCRIPTION OF WORK
1.2 REFERENCES
1.3 SUBMITTALS
1.4 GENERAL REQUIREMENTS
1.5 MAINTENANCE

PART 2 PRODUCTS

2.1 POWER SUPPLY
2.2 CONNECTIONS TO TROLLEYS
2.3 CONTROL SYSTEMS
2.4 REMOTE (RADIO) CONTROLS
2.5 WARNING SIGNALS
2.6 MOTORS
2.7 BRAKES
2.8 PANELBOARD AND CIRCUITS
2.9 CONDUIT
2.10 INSULATED WIRE AND CABLE
2.11 TERMINAL BLOCKS

PART 3 EXECUTION

3.1 EQUIPMENT REMOVAL
3.2 EQUIPMENT INSTALLATION
3.3 ELECTRICAL TESTS
3.4 FREQUENCY ALLOCATION

SECTION 16050WC

ELECTRICAL WORK AND EQUIPMENT
WOLF CREEK

PART 1 GENERAL

1.1 DESCRIPTION OF WORK

The work specified under this section includes the modification of the operator's cab and all electrical equipment and wiring on the bridge crane and the design, fabrication, factory testing, furnishing, and installation of the electrical equipment and associated systems. The equipment includes motors, brakes, complete local and remote (radio) control systems, conduit, wiring, and auxiliary devices required to replace the cranes electrical power and control systems.

1.2 REFERENCES

The publications listed below form a part of this specification to the extent indicated by the reference. The publications are referred to in the text by basic definition only.

NATIONAL ELECTRICAL MANUFACTURERS ASSOCIATION (NEMA)

NEMA C80.1	(1994) Rigid Steel Conduit; Zinc Coated
NEMA C82.4	(1992) American National Standard for Ballasts - for High-Intensity-Discharge and Low-Pressure Sodium Lamps
NEMA PB 1	(2000) Panelboards
NEMA ICS 1	(2000) General Standards for Industrial Controls and Systems
NEMA ICS 2	(2000) Industrial Control Devices, Controllers and Assemblies
NEMA ICS 3	(2000) Industrial Controls and Systems Controllers, Contactors, and Overload Relays, Rated not More than 2000 Volts ac or 750 Volts dc
NEMA ICS 6	(2001) Industrial Systems and Systems Enclosures
NEMA ICS 7	(2000) Industrial Control and Systems: Adjustable Speed Drives
NEMA ICS 7.1	(2000) Safety Standards for Construction and Guide Selection, Installation, and Operation of Adjustable-Speed Drive System
NEMA MG 1	(2002) Motors and Generators
NEMA WC 57	(1998) Control Cables

NEMA WC 70	(2001) Non-shielded Power Cables Rated 2000 Volts or Less for the Distribution of Electric Energy

NATIONAL FIRE PROTECTION ASSOCIATION (NFPA)

NFPA 70	(2002) National Electrical Code 1999 Edition

UNDERWRITER'S LABORATORIES, INC. (UL)

UL 44	(2002) Rubber-Insulated Wires and Cables
UL 62	(2001) Safety Flexible Cord and Fixture Wire
UL 360	(2003) Liquid-tight Flexible Steel Conduit
UL 489	(2003) Molded-Case Circuit Breakers, Molded Case Switches, and Circuit-Breakers Enclosure. Replaces NEMA AB-1-1993
UL 1063	(2001) Machine-Tools Wires and Cables
UL 1581	(2003) Reference Std. For Electrical Wires, Cables, and Flexible Cords (First edit-1991)

1.3 SUBMITTALS

Submittals required by this section of the Technical Specifications shall be for Government approval (GA) or for information only (FIO), and shall be submitted as stated below in accordance with SECTION 01330. The time of submittals shall be in accordance with SECTION 01330 unless otherwise indicated below.

SD 01 Data

Motors; GA

a. Complete descriptive specification of each type motor to be furnished, with necessary cuts, photographs, and drawings to clearly indicate the construction, the treatments used to prevent corrosion of parts, bearing construction and type of insulation and treatment on the windings. Full NEMA standard name plate data and dimension sheets shall be furnished.

b. Motor characteristic curves or tabulated data (test or calculated) of each motor to be furnished indicating the speed, power factor, efficiency, current and kilowatt input, all plotted and tabulated against percent rated motor torque or percent rated motor load.

c. Characteristics of the position encoders furnished with the motor.

Brakes; GA

a. Complete descriptive data covering each type of brake to be furnished with necessary cuts, photographs and drawings to indicate clearly the construction of the brake and the materials used. Means of release, and torque adjustment of holding brakes, specifications and characteristics, including range of torque adjustment of holding brakes,

input current, minimum voltage at which brake will release, rectifier unit specifications and characteristics and all other features which are required to demonstrate that the electrical brakes conform to the requirements of the specifications.

b. Calculations to determine the torque rating for each brake.

Control System, Drivers, Radio Control and Equipment; GA

a. Complete descriptive data, including ratings and catalog designations covering all main component equipment parts and assemblies of the control system, the panel layouts and dimensioned outline drawings, schematic and wiring diagrams, interconnecting wiring diagram, and construction wiring diagrams. The schematic wiring diagrams shall include power and control circuitry, and shall indicate the collectors. The wiring diagrams shall indicate the wiring for individual items of equipment within all panels and equipment items, terminal board connections, wire designations, and size and type of wire. The wiring diagrams shall also show all connections between individual panels and between separately located items.

b. A description of the scheme of operation and of the provisions for adjusting the operating characteristics in the field.

c. Complete description of the protective panel and air circuit breaker panelboards, including rating of circuit breakers, contactors and relays; and catalog designations of each item.

d. Curves showing the tripping time versus current characteristics of the proposed overload relays.

e. Performance characteristic curves (test or calculated) of the control system for each motion of the crane for each point of the master control switch. The performance characteristic curves for the hoist control system (hoisting and lowering) shall be plotted in terms of hook load and speed, the hook load being the abscissa and hook speed the ordinate. The performance characteristic for other motions shall be plotted in terms of travel speed and load. For infinitely adjustable ranges (or stepless control ranges), the characteristics may be shown as shaded areas with boundaries which indicate maximum and minimum controlled limits.

f. Complete description of master control switches to be used, including rating, catalog designations and dimensioned outline drawings.

Limit Switches; GA

Complete descriptive data or literature covering the limit switches, that will indicate clearly the construction, materials used in the parts, rating, accuracy of tripping and reset, method of adjustment, and safeguards.

Load Cells; GA

Complete descriptive literature and specifications with necessary catalog cuts, photographs, and drawings to clearly indicate the construction of the units.

Lighting and Convenience Outlet System; GA

Complete descriptive data covering the lighting system, with necessary cuts, photographs or catalog data to indicate the type and rating of transformer, breakers, panelboard, lighting fixtures, ballasts, and convenience outlets proposed.

Conduit System; GA

Data to indicate conduit type and size; locations of the fittings, conduits, splice and junction boxes; and the number and the sizes of conductors in each conduit.

Wire and Cable; GA

Data to demonstrate that the proposed wire and cable conform to these specifications. This information shall include the name of the manufacturer and trade name or designation, the standard to which manufactured (NEMA, etc.), voltage rating, insulation material and thickness, and other pertinent features. Procurement of the wire and cable shall not be made until the data has been approved.

Contact Conductors and Collectors; GA

Complete descriptive specifications of the contact conductor and collector system components to be furnished with necessary cuts, photographs, and drawings to clearly indicate the construction and mounting of the components. Calculations to determine the sizing of the conductor and collector system.

SD 04 Drawings

Dimensioned Outline Drawings; GA

a. Dimensioned outline drawings for each type motor and brake.

b. A dimensioned outline drawing of each limit switch.

c. Detail drawing or drawings showing the method of mounting the lighting fixtures and a description of the procedure to be followed in relamping.

d. Drawings and data to show complete conduit routing, including detailed location of all drilling required in structural members.

e. Drawings and data to indicate conduit type and size; locations of the fittings, conduits, splice and junction boxes; and the number and the sizes of conductors in each conduit.

f. Dimensioned outline drawings of operator’s cab.

g. Locations and layout of all electrical equipment, including cabinets, motors, brakes, controls, and interconnecting conduits. Drawings shall include detailed locations of all drilling required in structural members. Weights of items shall be included.

SD 09 Reports

Test Reports; GA

Five certified copies of the reports of all tests specified in paragraph 3.3.1.

SD 13 Certificates

Certification of the factory adjusted torque rating of holding brakes; FIO.

1.4 GENERAL REQUIREMENTS

1.4.1 Type of Equipment and Quality

All equipment shall be of the type normally furnished for crane applications and service. All motors and control equipment shall be the products of manufacturers specializing in the production of this type of equipment as evidenced by the existence of previously published catalog data. All equipment shall be new and unused. Defective equipment or equipment damaged in the course of installation shall be replaced or repaired as approved. Equipment and materials for the same or similar or allied services shall be of the same manufacturer and type, and when of the same rating shall be interchangeable.

1.4.2 Code

The installation shall be in accordance with the National Electrical Code and the National Electrical Safety Code except where otherwise specifically indicated on the contract drawings or called for in the specifications. Omission of details on the drawings or in the specifications shall not be construed as permitting deviations from Code requirements.

1.4.3 Nameplates

In addition to the nameplate provided by the manufacturer, each item of electrical equipment, other than motors and brakes, shall be provided with a nameplate designating its function and service. All proposed designations shall be submitted to the Contracting Officer for approval. Nameplates shall be of 20 gage stainless steel with embossed lettering, laminated plastic with lettering engraved through upper layer, or anodized aluminum, stainless steel, plastic, or other material of equivalent durability which has engraved or etched lettering filled with enamel of a contrasting color. All nameplates shall be attached to the equipment with corrosion resisting screws.

1.4.4 Tests

Tests, unless otherwise specified, shall be made in conformity with the applicable Standards of the Institute of Electrical and Electronics Engineers.

1.4.5 Storage and Handling

Materials and equipment shall be suitably protected from dampness, dust and physical damage.

1.4.6 Warranty

A warranty shall be supplied stating that all items are free from defects in material, design and workmanship for one year from the date of acceptance. Upon receipt of notice from the Government of failure of any of the items, new replacement parts shall be furnished and promptly installed.

1.5 MAINTENANCE

1.5.1 Spare Parts

One set of manufacturers recommended spare parts for each crane shall be furnished and delivered to the site. The spare parts shall be packaged for long term protection and storage. The packaging shall be legibly labeled to identify the spare parts. A list of the furnished spare parts shall be included in Maintenance Manual.

a. One complete variable frequency drive of each type and size used.

b. Six fuses of each type and rating used shall be furnished as spares.

c. Six lamps of each type used in indicating lights.

d. Two sets of control switch replacement contacts for each 10 or fraction thereof of each type.

e. Two sets of replacement contacts for each type of contactor used.

f. Two replacement coils for each type of contactor used.

g. Two replacement auxiliary relays for each type used.

h. Two semiconductor devices (discrete or integrated circuit) including MOV's for surge protectors except for those furnished on printed circuit boards for each 10 or fraction thereof of each type used.

i. Two electronic equipment power supply of each type used.

j. Two limit switches of each type used for trolley and hoist travel.

k. Two sets of bearings and seals for each size and type of motor.

l. One brake shoe replacement kit for each brake.

m. One replacement encoder of each type used for hoist motors.

n. One brake coil for each type and size used.

o. One brake rectifier and control unit of each type used.

p. One replacement radio control transmitter and three sets of radio control transmitter batteries.

PART 2 PRODUCTS

2.1 POWER SUPPLY

2.1.1 General

Electrical power for the bridge crane is supplied to the existing rigid copper angle conductors from a nominal 480-volt, 3-phase, 60 Hz ungrounded system. The existing main-line conductors and current collectors and all other wire and equipment shall be replaced. The incoming power circuit breaker shall be a 600-volt, 3-pole, manually-operated air circuit breaker having suitable ampere rating. Short circuit protection only shall be provided. The breaker shall be mounted in the protective panel. A circuit breaker shall be provided for each circuit connected to the line side of the incoming ac supply. Each circuit controlling a separate crane motion shall have individual protection. Fused disconnects will be acceptable if ac circuits are grouped on common breakers or if ac circuits are connected to the load side of the ac motor circuit breakers. In the latter case, motor disconnect switches shall be provided so that control circuits may be tested without energizing the motor. Circuit breakers which are not mounted in the control cabinets shall be mounted in the protective panel.

2.1.2 Main-Line Conductor System

The main-line conductor/collector system shall be complete with insulated mounting hardware. Voltage rating shall be 600 volt, minimum.

a. Conductors. The conductors shall be copper, or aluminum with stainless steel contact surface with flexible insulating shrouds that open to expose the live conductor only as the collector shoe passed along. They shall be 3-phase, and rated large enough to service the worst-case loading and limit the voltage drop to 2percent. Minimum ampacity shall be 500A.

b. Collectors. The collectors shall be the sliding shoe type, spring-loaded, with a rating adequate to serve the worst-case loading of the Bridge Crane, but not less than the rating of the feeder breaker. Each phase shall have an assembly with two shoe spaced approximately ten inches apart. Shoes shall be easily replaceable., Collectors shall be complete with mounting assembly for installation on the bridge structure.

2.2 CONNECTIONS TO TROLLEYS

Power and control circuits shall be brought to the trolley by means of a hinged or link carrier system supporting jacket and color coded multiple conductor power and control cables similar and equal to POWERTRAK as manufactured by Gleason Reel, 800 Horicon Street, Mayville, Wisconsin, 53050, phone: 414/387-4120. The conductors of all cables shall be terminated at each end by suitable terminal lugs connected to terminal blocks mounted in junction boxes of Type 4 construction conforming to NEMA Pub. No. ICS 6. Power and control circuits shall be segregated and terminated in separate junction boxes. Two extra conductors shall be provided in each control cable.

2.3 CONTROL SYSTEMS

2.3.1 General

The drive control systems for hoists shall be flux vector control variable-frequency ac. The drive control systems for travel shall be variable frequency ac or flux vector if necessary to meet the accuracy requirements. Hoist and travel motions shall be controlled by master switches. All hoist and travel motions shall be independently operable and capable of simultaneous usage. The controls shall have static reversing of the direction of hoist or travel. The controls shall provide smooth starting, stopping, acceleration, and deceleration at all speeds and loads while operating within safe limits of overload currents. Controls shall be designed to fail safe and cause the brakes to set automatically in case of control malfunction, protective device operation, or loss of power. The controls shall be designed so that, no matter how erratically the master switch handle may be operated, there will be no damage to control or equipment, nor any danger of dropping a hoist load. Controls shall be provided with field-selectable settings to allow driving the motors at greater than rated speeds when loads are light. The hoist and travel speed controls shall be provided with range selector switches which will allow the operator to select full-range control or reduced range control, for full travel of the master switch. Reduced range control shall provide that, when selected, full travel of the master switch shall continuously vary the speed setting from zero to a lower value within the full speed range. The reduced range value shall be field-programmable to between 10 and 30 percent of full speed. Drives and other controls shall be fully functional for testing when the motors are disconnected. All ac control shall be at 120 volts, maximum.

2.3.2 Operating Features

2.3.2.1 Hoisting and Lowering

Positive control of the lowering movement of all hoist hooks shall be maintained under all conditions of load. Mechanical or electrical load breaks shall not be used. The hoist controls shall provide 5 points of speed control for both hoisting and lowering, and shall provide regenerative or dynamic braking in the lowering direction. Means shall be provided to limit the maximum torque a hoist motor can develop, and the controls shall be adjusted so that hook loads greater than 200 percent of the rated hook load cannot be lifted. The load-speed characteristics shall be inherent in the controls at each speed setting. Speed control in the lowering direction shall be such as to permit the operator to stop the hook from any speed point, without time delay by returning the master switch to the OFF position. Control circuits and selector switches shall be provided to allow the two main hoists to be operated from one master switch when desired. The main hoist controls shall be provided with adjustable compensation that allows initial adjustment of the speed between main hoists operating at the same selected speed and load, to be within 1 percent of each other.

2.3.2.2 Hoisting Performances

The following hoisting performances are required:

a. The first (slowest) speed control point for hoisting shall be suitable for spotting all loads from no load on the hook to rated hook load. The hook speed for rated hook load and for no load on the hook shall not exceed 5 percent of the rated hoisting speed.

b. Main Hoist. The last (fastest) speed control point for hoisting shall provide a hoisting speed with rated hook load and with no load on the hook of 100 percent of rated hoisting speed.

Auxiliary Hoist. The fastest speed control setting for hoisting shall provide a hoisting speed with rated hook load of 100 percent of rated hoisting speed. This point shall be field-programmable for a range of 100 to 200 percent rated speed inversely proportional to load, when loads are less than rated. Initial setting of this point shall be 100 percent speed.

c. The last (fastest) speed control point for hoisting shall provide a hoisting speed with an overload on the hook less than rated hoist speed.

d. The intermediate speed control points 2, 3 and 4 shall provide, at any given hook load, hoisting speeds approximately equally spaced between the first and last hoisting speeds.

2.3.2.3 Lowering Performances

The following lowering performances are required:

a. The first (slowest) speed control point for lowering shall be suitable for spotting all loads from no load on the hook to 125 percent of rated hook load. The hook speeds shall not exceed 15 percent of the rated hoisting speed over the entire load range.

b. Main Hoist. The last (fastest) speed control point for lowering shall provide a lowering speed with rated load on the hook shall be less than 110 percent of rated hoisting speed.

Auxiliary Hoist. The fastest speed control for lowering shall provide a lowering speed with rated load on the hook of less than 110 percent of rated hoisting speed. This point shall be field-programmable for a range of 100-200 percent rated speed inversely proportional to load, when loads are less than rated. Initial setting of this point shall be 100 percent speed.

c. The last (fastest) speed control point for lowering shall provide a lowering speed with an overload on the hook which is approximately equal to the rated lowering speed.

d. The intermediate speed control points 2, 3 and 4 shall provide, at any given load, speeds approximately equally spaced between the first and last lowering speeds.

2.3.2.4 Bridge and Trolley Travel

The size (HP) and speed (RPM) of the existing and replacement motors are covered in paragraph 2.6. Travel motion controls shall provide essentially constant speed on each respective control point for all hook loads and shall provide dynamic or regenerative braking. Five points of speed control shall be provided for each direction of travel. Control circuits and selector switches shall be provided to allow the two trolley drives to be operated from one master switch when the trolleys are electrically or mechanically linked together. Sufficient speed droop or other acceptable means shall be provided in the travel drives to permit satisfactory operation when two drives are mechanically

interlocked. Compensating circuits shall be provided so that the steady-state operating deviation and service deviation band of speed regulation shall each not exceed 1 percent of the rated speed for all hook loads. The circuit shall be arranged so that the operator may hold the control on any accelerating point. The bridge and trolley travel control shall provide travel speeds as follows:

a. The first travel speed control point shall be capable of spotting all loads from no load on the hook to rated hook load.

b. With no load on the hoist hooks, the travel speeds on the first and last control points shall be not more than 12 percent and 110 percent, respectively, of the rated travel speed.

c. The bridge travel speed with rated load on the hook of the main hoist and the trolley travel speed with rated load on the trolley shall on the first control point be not more than 5 percent of the rated travel speed and on the last control point shall be equal to rated travel speed.

d. The speed on the other points of control shall be evenly spaced between the first and last points as required to give smooth acceleration and deceleration.

2.3.2.5 Positioning Accuracy

The control system shall be so designed that it will be possible to limit the motion of any hoist, trolley travel, or bridge travel motor to not more than the value specified below when starting from complete standstill with any load up to and including rated load.

MOTION	POSITIONING ACCURACY cm (inches)
Main Hoist	0.1587 (0.0625)
Auxiliary Hoist	0.1587 (0.0625)
Bridge Travel	0.1587 (0.0625)
Trolley Travel	0.1587 (0.0625)

2.3.3 Location of Controls and Control Equipment

Master control switches and emergency stop push button shall be located on the operator’s chair in a arrangement as shown as that the operator can actuate the master control switches when sitting in a position that will afford the best view of the respective operation. The direction of movement of the operating handles of all travel master control switches shall simulate the motion controlled. The handles of the hoist master control switches shall move away from the operator for lowering and toward the operator for hoisting. The protective panel and circuit panel boards shall be located in the operator’s cab. The cabinet or cabinets containing the directional magnetic contactors and control equipment shall be mounted on the bridge girder at a location that will permit easy access for the inspection and maintenance of the contactors and wiring. The cabinets shall be mounted so that any meters or indicating displays are no higher than six feet when standing in front of the cabinet.

2.3.4 Variable Frequency Drives

The drive controller for each motion shall provide true four quadrant drive and shall be solid state, pulse width modulated type with adequate

capacity to drive its motor or motors at all specified loads and speeds. It shall be rated for continuous duty with an ambient temperature of 40 degrees C and at the motor current necessary to lift rated load at any speed and a one minute rating of 150 percent current (200 percent rated load). Power factor shall be 0.95 or above from full speed to zero speed and at rated torque. Speed regulation shall be less than 1.0 percent from no-load to full-load, over the entire frequency range. Acceleration and deceleration shall be separately adjustable from 0.1 to 20 seconds. Control shall include torque proving feature, to verify that enough motor torque has built up before the brake is released. Hoist drives shall have closed-loop control with feedback from a motor-shaft-mounted encoder. Minimum protection shall consist of line isolating transformers, line reactors if necessary, transient voltage and current surge suppressors, and either current limiting rectifier type fuses or static instantaneous over-current circuits with sensing in each phase of the incoming line. Motor overload protection shall be included with the controller. The control circuit shall include an adjustable-operating current-limiting circuit capable of limiting maximum current to not more than the current necessary to obtain 200 percent motor torque.

2.3.5 Protective Features

2.3.5.1 General

Undervoltage, reverse-phase, and open-phase protection shall be provided. Overload Protection shall be provided for each motor.

2.3.5.2 Undervoltage Protection

Undervoltage protection shall be accomplished by means of a 3-pole main line magnetic contactor with its operating coil wired into the control circuit so that upon the functioning of any motor overload relay, or the occurrence of a power outage, the power to all motors shall be interrupted and it shall be necessary to return all master switches to the "OFF" position before the main line contactor can be reclosed. A pushbutton control station shall be provided to control the opening and closing of the main line contactor.

2.3.5.3 Reverse-Phase and Open Phase Protection

Reverse-phase and open phase-protection shall be provided by a suitable induction type relay or relays that will open the main line contactor upon the occurrence of a reverse or open-phase condition.

2.3.5.4 Protective Panel

All protective equipment specified above and the main power disconnecting circuit breaker shall be mounted on steel panels and shall be wired to terminal blocks or studs complete and ready for making external connections. The panel shall be enclosed in a cabinet as specified in paragraph 2.3.11. Means shall be provided to permit the operation of the incoming power circuit breaker without opening the cabinet door and to lock it in the open position.

2.3.6 Master Switches

Master control switches for use with the control equipment shall be of a type designed for mounting on an operator's chair. Stepless master switches with indents corresponding to the specified operating characteristics are acceptable. Contacts, if required, shall be rated

not less than 15 amperes at 600 volts ac and shall be cam operated, except as specified below, double break (bridging type) and shall be renewable. The contact operating mechanism shall be of a design that will insure positive operation of the contacts. Master switches mounted with the contact assembly enclosed in dustproof, floor, wall or pedestal mounted enclosures shall be of the open type. The contacts shall be wired to convenient terminal blocks within the enclosure. The enclosures shall have removable covers to permit easy access to the wiring and to the switching mechanism. Master switches mounted with the contact assembly below an open desk shall have NEMA Type 1 contact assembly enclosures which provide ample space for making wiring connections and for inspection and maintenance. The operating mechanism housing shall be cast metal construction. The operating handle shall move in a vertical plane, shall be in a vertical position when the switch is in the "OFF" position, shall be provided with a star wheel and spring loaded pawl that will give a definite "feel" to the operating points and with more force required out of the "OFF" position, and a positive means to return it to the "OFF" position when released by the operator (deadman's handle). Control handles shall be identified as to the motion controlled by the respective master switch by color coding as follows:

Hoist	Vivid Orange
Trolley Travel	Brilliant Yellow
Bridge Travel	Light Blue

Color coding shall be accomplished by either painting the entire handle or by the use of colored plastic knobs.

2.3.7 Limit Switches

Limit Switches for controlling the upper limit of travel of all hoists shall be of the normally closed contact, weighted lever type, actuated directly by the hoist hooks or the hoist blocks and capable of being reset by reversing the movement of the hoist. Limit switches for controlling the lower limit of the main hoist and auxiliary hoist shall be of the traveling nut or rotating cam type, driven through gearing by the hoist. All limit switches shall be provided with nonventilated NEMA Type 12 enclosures and shall be mounted where they will be readily accessible for adjustment and inspection.

2.3.8 Load Cells

A load cell shall be placed on each main hoist to provide alarm circuits and continual load readout. The load cells shall be electronic type with a load indicator. The load indicator with digital display shall be calibrated in tons and to read up to 500 tons and be accurate to within 2 percent of the rated capacity of the load cell.

2.3.9 Push-button Station

The emergency "STOP" push-button for removal of power from the crane motion circuits, and the "START-STOP" pushbuttons for activating the crane motion circuits (main line contractor) shall be of the momentary contact, heavy-duty type. The contacts shall have a pilot and control circuit contact rating of A600 at 600-volts in accordance with NEMA Pub. No. ICS 2. The emergency "STOP" push-button shall be connected to operate the contractor specified in paragraph "Undervoltage Protection" and shall be provided with a red mushroom head.

2.3.10 Resistors

Resistors for motor circuits shall be of the nonbreakable, corrosion-resisting type, shall have a low temperature coefficient, and shall be rated for continuous duty.

2.3.11 Control Cabinets

Control cabinets shall be made of steel sheets, and shall conform to NEMA Pub. No. ICS 6 for NEMA Type 1 construction shall be provided with the necessary conduit entrances and gasketed hinged door or doors as necessary to permit removing any device and the making of all wiring connections. Doors shall be provided with a 3-point latch with means to permit locking the door in the closed position and shall have door swings of not less than 180 degrees. Key locks shall be provided and all locks shall be keyed the same, six keys shall be provided. The doors shall be sized so that they can be totally opened when mounted on the crane.

2.4 REMOTE RADIO CONTROLS

2.4.1 Transmitter

The transmitter shall be interchangeable with the other devices furnished by the manufacturer, except for those features which are uniquely required by these specifications. Each transmitter shall be the manufacturer's current commercial product completely assembled, wired, tested at the factory, and delivered ready for installation and operation. The control transmitter shall be functionally and identical to the cab control with similar operating controls components, layout and "feel", except that it may be deeper and heavier if necessary. A “Cab Control Overdrive” feature shall be provided so that the crane can be operated from the transmitter in case the crane cab operator becomes incapacitated. The transmitter shall have an internal battery power source and internal antenna. It shall be capable of generating and transmitting all control signals necessary for operation of the system. Total weight shall not exceed twelve pounds, including battery.

2.4.1.1 Radio Frequency Characteristics

Radio Frequency (RF) output impedance shall be 50 ohms. The transmitted spurious harmonic emissions shall be less than minus 60 dB. Frequency stability shall be a maximum of 0.0005 percent over the operating temperature range as specified in paragraph "Environmental Requirements". Modulation deviation shall be adjustable to plus or minus 5 kHz. The transmitter shall be designed to maintain a minimum field strength of 30 microvolts within entire operating range. Its operating range shall be up to 300-ft. within the powerhouse structure. The maximum RF power output shall be 1 watt.

2.4.1.2 Frequency Allocation

The transmitters shall operate on a frequency range of 450-470 MHz. Contractor shall assist the Contracting Officer in the preparation of the required frequency allocation application.

2.4.1.3 Transmitter Identity Code

Each transmitter shall transmit a distinct identity code number as part of all signals is emanating from the transmitter. The identity code

shall allow for no less than a seven (7) digit code selection. Transmitter coding telemetry shall be pulsed digital data.

2.4.1.4 Battery Operation

The transmitter unit shall operate from a rechargeable sealed nickel calcium battery which will maintain adequate voltage to provide a minimum of eight hours of continuous operation. Battery replacement shall be accomplished by removal of no more than two screws or latches. The transmitter shall constantly monitor and supervise its own battery powered supply. A low-battery condition shall be indicated when battery voltage falls below 85 percent of the rated voltage.

2.4.1.5 Storage Cabinet, Battery Charger and Spare Batteries

A storage cabinet with provisions for wall mounting and for a minimum ¾-inch conduit connection shall be furnished. The cabinet shall contain a battery charger with provisions for connecting incoming ac power leads via conduit, storage space for the remote control box and for three spare batteries, while at least one additional battery is being charged. The cabinet shall be as specified in paragraph "CABINETS AND ENCLOSURES". The battery charger shall operate on a 120 volt, 60 Hz, single phase, grounded neutral circuit, connected with two No. 12 AWG conductors. A terminal for a No. 12 AWG grounding conductor shall be provided inside the cabinet Four batteries shall be furnished with the transmitter.

2.4.2 Control Panel

The crane mounted equipment shall receive digital frequency modulated (FM) radio coded signals from the control transmitter/encoder, accurately decode them, and operate solid state output devices that are capable of driving their associated crane control components. Each output shall have two screw terminals allowing connections to separate control transformer for each motor panel. A single common return is not acceptable. The output relays shall have current making, carrying and interrupting ratings greater by an acceptable margin, than the requirements of the circuits which they will switch, at voltages equal to or greater than those of the circuits to which they are connected. Output or input devices must be plug in with a hold down screw or latch and color coded by function and operating voltage range. The control panel shall be a programmable microprocessor based controller. The decoding computer shall provide system trouble shooting and diagnostics. It shall analyze and evaluate incoming digital messages and output devices, as well as on-board watchdog timers and discrete hardware.

2.4.2.1 Receiver System

One radio receiving system compatible with the transmitter frequency shall be provided. The system shall be completely assembled, wired, tested at the factory, and delivered ready for installation and operation. Receivers shall be solid-state design and shall use frequency modulation pulsed signal.

a. Receiver Section

Input impedance at the head end of the receiver section shall match a 50 ohm antenna. The receiver shall receive the transmitted signal on a frequency assignment between 450-470 MHz. The sensitivity of the

receiver shall be a minimum of 0.5 microvolts, producing a 20 dB quieting of the receiver output noise. Receiver shall have sparious response rejection not less than a minimum 75 dB. Receiver shall have no more than 5 percent audio distortion measured at 1000 Hz. Receiver shall have a hum and noise level not greater than minus 50 dB below the signal level. Receiver output shall be compatible with the associated device.

b. Receiver Requirements

The receiver shall be selected and installed with adequate gain margin, and adequate gain margin shall be allowed for signal fading and equipment aging. Receiver shall provide for error checking of the transmitted information, to ensure all information is received as intended. An error rate of less than 5 errors per 1,000,000 commands shall be maintained. Error rate shall be determined end to end from transmitter through receiver to decoder output.

2.4.2.2 Control Panel Supervision

The supervisory system shall provide constant supervision of the operating conditions of the control panel. Indicators shall be provided for each major component, and an audible signal shall be produced in the event of failure of any major component. Panel shall provide for fail safe condition and all crane functions shall cease when a failure occurs.

2.4.2.3 Electrical Connections

The control panel shall be designed with modular components to allow interchange of components for maintenance purposes.

2.4.2.4 Power Supply

The solid state power supply shall provide regulation for ± 10 percent of the input voltage. The power supply shall be completely transistorized and shall contain no moving parts. Output voltage and current regulation and protection are an integral part of the power supply design. Either overvoltage or undervoltage in excess of specifications shall disconnect the radio decoder for its protection. When power is returned to a safe level, operation shall resume. Power supply shall provide transient protection on a line to line or line to ground basis. The power supply shall include ground isolation between input and output terminals to allow grounding of all radio crane control equipment and thereby eliminate shock hazards to maintenance personnel and others.

2.4.2.5 Anti-Condensation Heaters
Control cabinets shall be equipped with thermostatically controlled anti-condensation heaters.

2.4.3 Antenna System

The antenna system shall utilize vertical polarization antennas and matching networks as needed for the proper coverage. The antenna system shall be omni-directional. The antenna system and cabling shall be furnished to provide adequate system gain. The receiver antenna

location shall be selected by the Contractor and approved by the Contracting Officer to meet the requirements as determined from the topography within the powerhouse.

2.5 WARNING SIGNALS

2.5.1 Travel Warning

A 25 cm (10-inch), single stroke, electrically operated bell shall be installed at a suitable location on the exterior of the cab. The bell shall have an ANSI rating of not less than 65 decibels at 3 meters (10 feet), and shall operate on 60-Hz, 115 volts. A timer shall be provided to give stroking impulses to the bell at approximately five-second intervals and shall be connected into the bridge travel master switch so that movement of the switch from the "OFF" position in either direction initiates the signal. A foot operated switch shall also be provided and located in the operator's cab for operation of the bell when the crane is at standstill for as long as the switch is actuated.

2.5.2 Crane Operation

A flashing amber light shall be installed under each operator’s cab. The lights shall operate automatically whenever the crane is energized.

2.6 MOTORS

The size (HP) and speed (RPM) of the existing motors are as follows:

MOTION	SIZE (HP)	SPEED (RPM)
Main Hoist (2)	50 HP	865 RPM
Auxiliary Hoist (2)	50 HP	865 RPM
Bridge Travel (2)	40 HP	875 RPM
Trolley Travel (2)	10 HP	865 RPM

The size (HP) and speed (RPM) of the replacement motors are as follows:

MOTION	SIZE (HP)	SPEED (RPM)
Main Hoist	50 HP	1750 RPM
Auxiliary Hoist	60 HP	1750 RPM
Bridge Travel (2)	40 HP	900 RPM
Trolley Travel	10 HP	900 RPM

Motors except as otherwise specified herein shall conform to the provisions of NEMA Pub. No. MG 1. They shall be rated at 230/460 or 460-volt, 3-phase, 60-Hz, ac power and shall be of the squirrel cage induction type and shall be of the totally enclosed frame construction and may be either fan-cooled or non-ventilated. Winding insulation shall be either Class B, F or H and the temperature rise of the motors furnished shall not exceed that permitted by the applicable NEMA Standards for the class of insulation used. Each motor shall have a horsepower rating sufficient to meet the respective operating requirements specified without exceeding its rated full-load torque. The time ratings shall be not less than the following:

Main hoist motors	Continuous
Aux. hoist motors	Continuous
Trolley travel motors	60 min.
Bridge travel motors	Continuous

Bearings shall be of the anti-friction type and the design of the motor housing and method of assembly shall permit ready removal of the end brackets and prevent escape of lubricant and entrance of foreign materials. Unless the bearings are of an approved prelubricated type requiring no addition or change of lubricant for a period of at least 5 years, readily accessible fitted openings located in the top and bottom of the bearing housing, respectively, shall be provided for applying and draining the lubricant. Pressure lubricating fittings may be used provided the housings are properly vented to prevent damage to the seals. In addition, the motors for the trolley drives shall have a C-face for mounting a disc brake.

2.7 BRAKES

2.7.1 General

Each hoist motor shall be provided with two electric brakes, one mounted on the motor shaft and one on the reducer shaft. One electric brake, mounted on the motor shaft, shall be provided with each travel motor.

2.7.2 Type

The electric holding brakes shall be of the shoe type, spring set, with direct current magnet release, and shall be arranged for Type I mounting as defined in ICS 2-220.60 of NEMA Pub. No. ICS, if practicable. Trolley brakes shall be disc type.

2.7.3 Rating

Hoist brakes shall have a torque rating not less than 125 percent of the rated torque of the motor. Bridge and trolley travel brakes shall have a torque rating not less than full-load torque of the bridge and trolley motors. The torque rating of the brake shall be referred to the shaft on which the brake wheel is mounted, the efficiency of the speed reducer not being considered. The torque ratings shall be based on the following conditions:

Hoist and bridge travel brakes:	Continuous duty
Trolley travel:	1-hour duty

2.7.4 Release

Releasing magnets shall be of the direct current shunt type. Direct current shall be supplied by means of a rectifier and control unit of proper rating and suitable for operation on power supplied the crane. The complete unit (brake and rectifier) shall be suitable for connection to the control circuit or the ac power circuit of the motor with which the brake is used so that the brake will set or release when the motor is de-energized, or energized, respectively. A hand release which is self-resetting shall be provided. The hoist brakes shall be connected into the control system such that one brake will set after a small time delay. The time delay shall be adjustable and the method of accomplishment shall be subject to approval. The rating of the brake releasing magnet shall be sufficient to release and hold the brake in the released position with 80 percent of rated voltage impressed on the incoming terminals.

2.7.5 Adjustment

Suitable means shall be provided to allow varying the holding torque and adjusting the positions of the shoes to compensate for wear, unless the design is such that compensation for shoe wear is automatic. The hoist motor brakes which are rated at 125 percent of the rated motor torque shall be initially adjusted to give a holding torque equivalent to 100 percent of the full-load motor torque.

2.7.6 Mechanical Construction

Except for brake base, brake wheels, shoes, shoe holders and electrical parts, no cast iron, unless of a type having acceptable structural properties as approved by the Contracting Officer, shall be used in brake construction. All allowed cast iron components except electrical parts shall be ductile iron. All pins, fittings and other miscellaneous small metal parts shall be of corrosion-resisting metal or shall be treated to render corrosion resistant by galvanizing; sherardizing; or plating with zinc, cadmium or copper. Bearings shall be fitted with bronze or other approved bushings to prevent any binding of moving parts. (Antifriction bearings of corrosion-resisting construction may be used.) Adequate means shall be provided for lubricating oil bearings, unless the bearings are of an approved self or prelubricated type.

2.7.7 Designation and Markings

Nameplates shall be provided for each brake and attached to a part of the brake which ordinarily will not be renewed during its service life. Each nameplate shall conform to standard practice and clearly indicate the manufacturer's name, identification symbols, serial number, and salient design features such as type, frame, torque rating and voltage.

2.8 PANELBOARD AND CIRCUITS

2.8.1 Panelboard

One 480-volt and one 120-volt dead front panelboard complete with buses, gutters, barriers, wiring and the following circuit breakers, as a minimum, shall be furnished and mounted in the operator's cab. Means shall be provided for locking each circuit breaker in the open position. The panelboards shall be in accordance with NEMA Pub. No. PB-1.

1 - 3-Pole breaker for control of crane movement circuits

1 – single breaker for the working area lights

1 - 3-Pole breaker for the 480 volt outlet

1 - Single-pole, 20-ampere breaker for the crane control circuits

1 - Single-pole, 20-ampere breaker for control of operator's cab lights

2 - Single-pole, 20-ampere breakers for control of the convenience outlets

2 - Single-pole, 20-ampere spare breakers

2.8.2 Air Circuit Breakers

The air circuit breakers shall conform to the applicable requirements of UL 489 and shall be heavy duty type, I-T-E Type ET or Westinghouse Type AB De-ion circuit breakers or equal. Commercial air circuit breakers of the Westinghouse Quick-Lag Type, I-T-E Type EQ or Square D Type Q will not be acceptable. The air circuit breakers for 120 or 240 volts ac circuits shall be rated not less than 120/240 or 240 volts ac, and shall have a minimum NEMA interrupting capacity of 10,000 symmetrical amperes. The air circuit breakers for the 480-volt ac circuits shall be rated 600 volts ac, and shall have a minimum NEMA interrupting capacity of 18,000 symmetrical amperes at 600 volts ac.

2.8.3 Not Used

2.8.4 Cab Lights

Fixtures for 100 watt fluorescent fixtures with lamps, ballasts and shockproof type lamp sockets, equal to Holophane Cat. No. 7200-4, shall be provided in the operator's cab. The ballasts shall meet UL standards for Class P ballasts and operate within specifications over a temperature range of 0° to 100° C (32° to 212° F).

2.8.5 Convenience Outlets

Two convenience outlets shall be provided along each walkway on the main bridge girders, and two convenience outlets shall be provided in the operator's cab. All convenience outlets shall be connected to the 120-volt receptacle circuits in the panelboard and shall be GFCI type, duplex 125-volt, 20-ampere, 2-pole, 3-wire, polarized, NEMA configuration 5-20R, equal to Hubbell No. GF8300 (Hospital Grade), provided with cast metal receptacle housing with weatherproof caps and mounted on cast metal boxes. The receptacle housing and box shall be equal to Crouse-Hinds FS or FD boxes and provided with Hubbell 5206 type covers or equal.

2.8.6 Power Outlets

One 30 ampere, 480-volt, 3-phase, power outlet and box equal to Crouse-Hinds ARRH3482 shall be provided and installed on the crane walkway midway between the limits of trolley travel.

2.9 CONDUIT

Rigid steel conduit shall conform to NEMA C80.1 and shall be zinc-coated both inside and outside by hot-dip galvanizing method. Flexible conduit shall conform to UL 360, shall have a hot-dip galvanized steel core, copper ground wire and a waterproof extruded PVC cover.

2.10 INSULATED WIRE AND CABLE

2.10.1 General

Materials, construction and tests, unless otherwise specified, shall conform to the applicable requirements of NEMA Pub. No. WC 57 or WC 70, as applicable. Parts, tables, sections, appendices, grades and classes specified will refer to the above NEMA Standard, unless otherwise stated. Unless otherwise specified or approved, all wire and cable for power, control and lighting shall be single conductor. Wire for power and motor circuits shall have a current carrying capacity of not less

than the full-load current of the motor or the circuit but in no case less than No. 10 AWG. Wire for control circuits shall not be smaller than No. 14 AWG. Wire for lighting circuits shall have a current carrying capacity corresponding to the ampere rating of the circuit's air-circuit breaker, but in no case less than No. 12 AWG. Wires exposed to heat or in resistor cabinets shall be sized as required but in no case less than No. 10 AWG.

2.10.2 Conductors

Conductors shall conform to all the applicable requirements of Part 2 of WC 57, or see Section 2 of WC 70 and shall be annealed copper wire. Copper conductors shall be tin or lead alloy coated, or bare, as required by the type of insulation used.

Conductors shall be solid or stranded as required below:

a. Power and Control Circuits. Conductors shall have Class B or C stranding.

b. Lighting Circuits. Conductors of No. 10 AWG and smaller shall be solid, and conductors of No. 8 AWG and larger shall have Class B stranding.

2.10.3 Insulation

Insulation shall be a cross-linked polyethylene meeting the dimensional, electrical, and physical requirements of Part 3 of NEMA WC 57 or Section 3 of WC 70. Type I or Type II grade of EPR insulation shall be used for single-conductor cables with a jacket and for the individual conductors of a multiple-conductor cable with an overall jacket. Insulation thickness shall be as required by Table 3-1, Part 3 of NEMA WC 57 or Table 3-1 of WC 70 as applicable, for rated circuit voltage of 0-600 volts. Single conductor cross-linked polyethylene insulated cable with Column A thickness only will be permitted without a jacket. Single-conductor cables shall have jackets when insulation thicknesses are in accordance with Column B, Table 3-1, Part 3 of NEMA WC 70.

2.10.4 Jackets

An outer jacket of a synthetic thermosetting material shall be applied over multiple-conductor cables. Single-conductor cables and individual conductors of a multiple-conductor cable may have a jacket. The jacket shall be tightly and concentrically formed around the core of the cable. Single-conductor cables shall have jackets when insulation thicknesses are in accordance with Section H of NEMA WC 70.

The jacket shall be one of the materials listed below in accordance with the applicable paragraphs of NEMA WC 70. Polyvinyl chloride compounds will not be permitted. Variations from the materials required below will be permitted only if approved for each specific use, upon submittal of sufficient date to prove that they exceed all specified requirements for the particular application.

a. Neoprene, heavy-duty black.

b. Chlorosulfonated polyethylene, heavy-duty.

c. Chlorinate polyethylene, cross-linked, heavy-duty.

The outside diameter of single-conductor wires and multiple conductor cables shall not vary more than 5 percent and 10 percent, respectively from the manufacturer's published catalog data.

2.10.5 Wire Near Resistors

Wire exposed to heat shall be Type SF-2.

2.10.6 Control Panel Wiring

Control panel wiring shall be stranded copper switchboard wire with 600-volt insulation type SIS. Hinge wire shall have Class K stranding. Hinge wire shall be used between stationary and hinged equipment and shall be formed in wire loops or bundles at least 750 cm (two feet) long which shall provide rotation around the longitudinal axis of the conductors.

2.10.7 Linked Carrier System

The connections to the trolley shall be made using Type G cables with 75° C (167° F), 600 volt insulation and heavy-duty "Neoprene" jacket for the power circuits and type SO cord with 60° C (140° F), 600-volt insulation and "Neoprene" jacket for control and lighting circuits. Type G cables and SO cords shall conform to the applicable requirements of NEMA Pub. No. WC 3, Part 7, paragraphs 7.6 and 7.7, respectively. Conductors shall have not less than Class H stranding.

2.11 TERMINAL BLOCKS

Terminal blocks, where required, shall be molded type with barriers, rated not less than 600 volts, similar to General Electric Company Type EB-25 or Marathon Electric Manufacturing Corp. Series 1600, or approved equal. The terminal shall be removable binding, fillister, or washer head screw terminal, or stud type with contact and locknuts, and not less than size No. 10, having length and space for connecting at least two indented terminals on No. 19/22 AWG conductors to one terminal. White or other light-colored plastic marking strips, fastened by screws to the molded sections at each block, shall be provided for circuit designation. Each connected terminal of each block shall have the circuit designation or wire number neatly printed on the marking strip with durable marking fluid. One reversible or one spare marking strip shall be furnished with each block.

PART 3 EXECUTION

3.1 EQUIPMENT REMOVAL

Remove all electrical control equipment, motors, brakes, conduit (unless reused), wire and cable, conductor system (including mounting brackets),and the four high bay incandescent light fixtures. All equipment removed shall become the property of the contractor.

3.2 EQUIPMENT INSTALLATION

3.2.1 General

All work shall be installed as shown and in accordance with the manufacturer’s recommendations, unless otherwise specified. All necessary interconnections, services, and adjustments required for a

complete and operational system shall be provided. Electrical work shall be in accordance with NFPA 70.

3.2.2 Manufacturers Technical Services

Equipment manufacturers shall make available the services of a competent installation technician during installation, startup, an testing. He shall have the responsibility of checking the installation and making any field adjustments necessary to obtain a working system within the applicable requirements. The manufacture’s representative shall also be responsible for supervision of all testing, and for providing system training.

3.2.3 Conduit

All wiring between equipment units or components shall be installed in rigid, hot-dip galvanized steel conduit, except that liquid-tight flexible conduit may be used for short connection when so approved by the Contracting Officer. The conduit shall be securely mounted and installed in a neat and workmanlike manner. Conduit shall not be run on top of girders or walkways and, except where necessary, shall not be exposed to view from the powerhouse floor. Conduit junction boxes, cover plates, and fittings shall be galvanized cast or malleable iron, cast aluminum, or cast brass. Turns shall be made by means of conduit fittings, in order that the conduit may fit close to the crane framework, and all joints shall be threaded and all termination's at equipment units or components shall be made by lock nuts and bushings or shall be threaded. Conduit unions shall be used to join conduit where standard couplings cannot be used. No running threads will be permitted. Ends of conduit shall be carefully reamed. Separate conduit systems shall be provided for power, control and lighting circuits. The entire conduit system shall be grounded. No conduit smaller than 2 cm (3/4 inch) size shall be used. All mechanical work of installing the conduit shall be complete before installing wire.

3.2.4 Wiring

All conductor connections, except for splices in lighting conductors which are made in junction boxes, shall be terminated at terminal studs or terminal blocks using approved indented terminal connectors of the ring-tongue type which are equal to "STA-KON" type as manufactured by Thomas and Betts Co. All screw type terminals shall have lock washers and all stud type terminals shall have contact nuts and either locking nuts or lock washers. No splices shall be made in any wiring on a panel or in a conduit. Single conductors and individual conductors of cables shall be identified with non-metallic tube-type markers at each termination. Tubing shall be sized to fit the wire and shall be uniform in position. The tubing shall be stamped with black wire numbers as indicated on the drawings. Multiple-conductor cables shall be identified with cable designation by embossed aluminum band markers at each termination.

3.3 ELECTRICAL TESTS

3.3.1 General

Each item shall be tested, as required below, to determine if the item is free from electrical and mechanical defects and conforms to the requirements of the specifications. All tests required herein shall be witnessed by the GQAR, unless waived in writing, and no equipment shall

be shipped until it has been approved for shipment by the GQAR. The Contractor shall notify the GQAR sufficiently in advance of the date of the tests, so that arrangements can be made for the GQAR to be present at the tests. The test equipment and the test methods used shall conform to the applicable requirements of ANSI, IEEE and NEMA standards, and shall be subject to the approval of the GQAR. The Contractor shall furnish five certified copies of the reports of all tests recording all data obtained during any given test. Certified copies of the results of the performance and speed-torque tests for duplicate motors will be accepted in lieu of requiring these tests to be repeated. The cost of performing all tests shall be borne by the Contractor and shall be included in the price bid.

3.3.2 Electric Brakes

Each electric brake shall be given the following tests:

a. Operation of release with 80 percent of rated voltage applied to the incoming terminals of the rectifier.

b. Resistance measurement of DC operation coil.

c. Dielectric.

3.3.3 Control System Equipment

Each of these items shall be tested in accordance with NEMA ICS 1.

3.3.3.1 Controller

Controllers shall be given the following tests:

a. Adjustment, fit and material.
b. Successful or general operation.
c. Resistance's.
d. Dielectric.
e. Insulation resistance.

3.3.3.2 Limit Switches

Limit switches shall be given the following tests:

a. Adjustment, fit and material.
b. Accuracy of trip and reset.
c. Successful or general operation.
d. Dielectric.
e. Insulation resistance.

3.3.4 Motors

Each induction motor shall be given the standard routine and performance tests as specified in NEMA MG-1. Performance curves indicating the results of these tests shall be furnished as follows:

a. Performance Test. Torque or percent of rated horsepower output as abscissa vs. efficiency, power factor, amperes, watts and rpm or percent slip as ordinates.

b. Speed-Torque Test. Torque as abscissa vs. speed in rpm or percent of synchronous speed as ordinates.

3.3.5 Wiring

After installation, but just prior to terminal connection, each conductor shall be tested as follows:

a. A 1000-volt "Megger" test shall be performed with all other conductors in each conduit grounded. The final insulation resistance of each conductor shall not be less than one megohm.

b. A continuity test of each conductor from terminal to terminal shall be performed and a phase identification check of power conductors shall be made.

c. Test data shall include "Megger" readings, results of the continuity test, and conductor identification markings.

d. Any length of wire and cable failing under the above tests shall be replaced.

3.4 FREQUENCY ALLOCATION

AFARS 252.235-7003 FREQUENCY AUTHORIZATION. (DEC 1991) - Alternate I (DEC 1991)

a. The Contractor shall prepare applications and otherwise perform all work necessary for the Government to obtain AUTHORIZATION for radio frequencies required in support of this contract.

b. For any experimental, developmental, or operational equipment for which the appropriate FREQUENCY allocation has not been made, the Contractor shall provide the technical operation characteristics of the proposed electromagnetic radiating device to the Contracting Officer during the initial planning, experimental, or developmental phase of contract performance.

C. The Contractor shall use DD Form 1494, Application for FREQUENCY AUTHORIZATION, to obtain radio FREOUENCY AUTHORIZATION.

d. The Contractor shall include this clause, including this paragraph d., in all subcontracts requiring the development, production, construction, testing, or operation of a device for which a radio FREQUENCY AUTHORIZATION is required.

(End of clause).

END OF SECTION 16050WC

SECTION 16050CH

ELECTRICAL WORK AND EQUIPMENT
CENTER HILL

TABLE OF CONTENTS

PART 1 GENERAL

1.1 DESCRIPTION OF WORK
1.2 REFERENCES
1.3 SUBMITTALS
1.4 GENERAL REQUIREMENTS
1.5 MAINTENANCE

PART 2 PRODUCTS

2.1 POWER SUPPLY
2.2 CONNECTIONS TO TROLLEYS
2.3 CONTROL SYSTEMS
2.4 REMOTE (RADIO) CONTROLS
2.5 WARNING SIGNALS
2.6 MOTORS
2.7 BRAKES
2.8 PANELBOARD AND CIRCUITS
2.9 CONDUIT
2.10 INSULATED WIRE AND CABLE
2.11 TERMINAL BLOCKS

PART 3 EXECUTION

3.1 EQUIPMENT REMOVAL
3.2 EQUIPMENT INSTALLATION
3.3 ELECTRICAL TESTS
3.4 FREQUENCY ALLOCATION

SECTION 16050CH

ELECTRICAL WORK AND EQUIPMENT
CENTER HILL

PART 1 GENERAL

1.1 DESCRIPTION OF WORK

The work specified under this section includes the modification of the operator's cab and all electrical equipment and wiring on the bridge crane and the design, fabrication, factory testing, furnishing, and installation of the electrical equipment and associated systems. The equipment includes motors, brakes, complete local and remote (radio) control systems, conduit, wiring, and auxiliary devices required to replace the cranes electrical power and control systems.

1.2 REFERENCES

The publications listed below form a part of this specification to the extent indicated by the reference. The publications are referred to in the text by basic definition only.

NATIONAL ELECTRICAL MANUFACTURERS ASSOCIATION (NEMA)

NEMA C80.1	(1994) Rigid Steel Conduit; Zinc Coated
NEMA C82.4	(1992) American National Standard for Ballasts - for High-Intensity-Discharge and Low-Pressure Sodium Lamps
NEMA PB 1	(2000) Panelboards
NEMA ICS 1	(2000) General Standards for Industrial Controls and Systems
NEMA ICS 2	(2000) Industrial Control Devices, Controllers and Assemblies
NEMA ICS 3	(2000) Industrial Controls and Systems Controllers, Contactors, and Overload Relays, Rated not More than 2000 Volts ac or 750 Volts dc
NEMA ICS 6	(2001) Industrial Systems and Systems Enclosures
NEMA ICS 7	(2000) Industrial Control and Systems: Adjustable Speed Drives
NEMA ICS 7.1	(2000) Safety Standards for Construction and Guide Selection, Installation, and Operation of Adjustable-Speed Drive System
NEMA MG 1	(2002) Motors and Generators
NEMA WC 57	(1998) Control Cables

NEMA WC 70	(2001) Non-shielded Power Cables Rated 2000 Volts or Less for the Distribution of Electric Energy

NATIONAL FIRE PROTECTION ASSOCIATION (NFPA)

NFPA 70	(2002) National Electrical Code 1999 Edition

UNDERWRITER'S LABORATORIES, INC. (UL)

UL 44	(2002) Rubber-Insulated Wires and Cables
UL 62	(2001) Safety Flexible Cord and Fixture Wire
UL 360	(2003) Liquid-tight Flexible Steel Conduit
UL 489	(2003) Molded-Case Circuit Breakers, Molded Case Switches, and Circuit-Breakers Enclosure. Replaces NEMA AB-1-1993
UL 1063	(2001) Machine-Tools Wires and Cables
UL 1581	(2003) Reference Std. For Electrical Wires, Cables, and Flexible Cords (First edit-1991)

1.3 SUBMITTALS

Submittals required by this section of the Technical Specifications shall be for Government approval (GA) or for information only (FIO), and shall be submitted as stated below in accordance with SECTION 01330. The time of submittals shall be in accordance with SECTION 01330 unless otherwise indicated below.

SD 01 Data

Motors; GA

a. Complete descriptive specification of each type motor to be furnished, with necessary cuts, photographs, and drawings to clearly indicate the construction, the treatments used to prevent corrosion of parts, bearing construction and type of insulation and treatment on the windings. Full NEMA standard name plate data and dimension sheets shall be furnished.

b. Motor characteristic curves or tabulated data (test or calculated) of each motor to be furnished indicating the speed, power factor, efficiency, current and kilowatt input, all plotted and tabulated against percent rated motor torque or percent rated motor load.

c. Characteristics of the position encoders furnished with the motor.

Brakes; GA

a. Complete descriptive data covering each type of brake to be furnished with necessary cuts, photographs and drawings to indicate clearly the construction of the brake and the materials used. Means of release, and torque adjustment of holding brakes, specifications and characteristics, including range of torque adjustment of holding brakes,

input current, minimum voltage at which brake will release, rectifier unit specifications and characteristics and all other features which are required to demonstrate that the electrical brakes conform to the requirements of the specifications.

b. Calculations to determine the torque rating for each brake.

Control System, Drivers, Radio Control and Equipment; GA

a. Complete descriptive data, including ratings and catalog designations covering all main component equipment parts and assemblies of the control system, the panel layouts and dimensioned outline drawings, schematic and wiring diagrams, interconnecting wiring diagram, and construction wiring diagrams. The schematic wiring diagrams shall include power and control circuitry, and shall indicate the collectors. The wiring diagrams shall indicate the wiring for individual items of equipment within all panels and equipment items, terminal board connections, wire designations, and size and type of wire. The wiring diagrams shall also show all connections between individual panels and between separately located items.

b. A description of the scheme of operation and of the provisions for adjusting the operating characteristics in the field.

c. Complete description of the protective panel and air circuit breaker panelboards, including rating of circuit breakers, contactors and relays; and catalog designations of each item.

d. Curves showing the tripping time versus current characteristics of the proposed overload relays.

e. Performance characteristic curves (test or calculated) of the control system for each motion of the crane for each point of the master control switch. The performance characteristic curves for the hoist control system (hoisting and lowering) shall be plotted in terms of hook load and speed, the hook load being the abscissa and hook speed the ordinate. The performance characteristic for other motions shall be plotted in terms of travel speed and load. For infinitely adjustable ranges (or stepless control ranges), the characteristics may be shown as shaded areas with boundaries which indicate maximum and minimum controlled limits.

f. Complete description of master control switches to be used, including rating, catalog designations and dimensioned outline drawings.

Limit Switches; GA

Complete descriptive data or literature covering the limit switches, that will indicate clearly the construction, materials used in the parts, rating, accuracy of tripping and reset, method of adjustment, and safeguards.

Load Cells; GA

Complete descriptive literature and specifications with necessary catalog cuts, photographs, and drawings to clearly indicate the construction of the units.

Lighting and Convenience Outlet System; GA

Complete descriptive data covering the lighting system, with necessary cuts, photographs or catalog data to indicate the type and rating of transformer, breakers, panelboard, lighting fixtures, ballasts, and convenience outlets proposed.

Conduit System; GA

Data to indicate conduit type and size; locations of the fittings, conduits, splice and junction boxes; and the number and the sizes of conductors in each conduit.

Wire and Cable; GA

Data to demonstrate that the proposed wire and cable conform to these specifications. This information shall include the name of the manufacturer and trade name or designation, the standard to which manufactured (NEMA, etc.), voltage rating, insulation material and thickness, and other pertinent features. Procurement of the wire and cable shall not be made until the data has been approved.

Contact Conductors and Collectors; GA

Complete descriptive specifications of the contact conductor and collector system components to be furnished with necessary cuts, photographs, and drawings to clearly indicate the construction and mounting of the components. Calculations to determine the sizing of the conductor and collector system.

SD 04 Drawings

Dimensioned Outline Drawings; GA

a. Dimensioned outline drawings for each type motor and brake.

b. A dimensioned outline drawing of each limit switch.

c. Detail drawing or drawings showing the method of mounting the lighting fixtures and a description of the procedure to be followed in relamping.

d. Drawings and data to show complete conduit routing, including detailed location of all drilling required in structural members.

e. Drawings and data to indicate conduit type and size; locations of the fittings, conduits, splice and junction boxes; and the number and the sizes of conductors in each conduit.

f. Dimensioned outline drawings of operator’s cab.

g. Locations and layout of all electrical equipment, including cabinets, motors, brakes, controls, and interconnecting conduits. Drawings shall include detailed locations of all drilling required in structural members. Weights of items shall be included.

SD 09 Reports

Test Reports; GA

Five certified copies of the reports of all tests specified in paragraph 3.3.1.

SD 13 Certificates

Certification of the factory adjusted torque rating of holding brakes; FIO.

1.4 GENERAL REQUIREMENTS

1.4.1 Type of Equipment and Quality

All equipment shall be of the type normally furnished for crane applications and service. All motors and control equipment shall be the products of manufacturers specializing in the production of this type of equipment as evidenced by the existence of previously published catalog data. All equipment shall be new and unused. Defective equipment or equipment damaged in the course of installation shall be replaced or repaired as approved. Equipment and materials for the same or similar or allied services shall be of the same manufacturer and type, and when of the same rating shall be interchangeable.

1.4.2 Code

The installation shall be in accordance with the National Electrical Code and the National Electrical Safety Code except where otherwise specifically indicated on the contract drawings or called for in the specifications. Omission of details on the drawings or in the specifications shall not be construed as permitting deviations from Code requirements.

1.4.3 Nameplates

In addition to the nameplate provided by the manufacturer, each item of electrical equipment, other than motors and brakes, shall be provided with a nameplate designating its function and service. All proposed designations shall be submitted to the Contracting Officer for approval. Nameplates shall be of 20 gage stainless steel with embossed lettering, laminated plastic with lettering engraved through upper layer, or anodized aluminum, stainless steel, plastic, or other material of equivalent durability which has engraved or etched lettering filled with enamel of a contrasting color. All nameplates shall be attached to the equipment with corrosion resisting screws.

1.4.4 Tests

Tests, unless otherwise specified, shall be made in conformity with the applicable Standards of the Institute of Electrical and Electronics Engineers.

1.4.5 Storage and Handling

Materials and equipment shall be suitably protected from dampness, dust and physical damage.

1.4.6 Warranty

A warranty shall be supplied stating that all items are free from defects in material, design and workmanship for one year from the date of acceptance. Upon receipt of notice from the Government of failure of any of the items, new replacement parts shall be furnished and promptly installed.

1.5 MAINTENANCE

1.5.1 Spare Parts

One set of manufacturers recommended spare parts for each crane shall be furnished and delivered to the site. The spare parts shall be packaged for long term protection and storage. The packaging shall be legibly labeled to identify the spare parts. A list of the furnished spare parts shall be included in Maintenance Manual.

a. One complete variable frequency drive of each type and size used.

b. Six fuses of each type and rating used shall be furnished as spares.

c. Six lamps of each type used in indicating lights.

d. Two sets of control switch replacement contacts for each 10 or fraction thereof of each type.

e. Two sets of replacement contacts for each type of contactor used.

f. Two replacement coils for each type of contactor used.

g. Two replacement auxiliary relays for each type used.

h. Two semiconductor devices (discrete or integrated circuit) including MOV's for surge protectors except for those furnished on printed circuit boards for each 10 or fraction thereof of each type used.

i. Two electronic equipment power supply of each type used.

j. Two limit switches of each type used for trolley and hoist travel.

k. Two sets of bearings and seals for each size and type of motor.

l. One brake shoe replacement kit for each brake.

m. One replacement encoder of each type used for hoist motors.

n. One brake coil for each type and size used.

o. One brake rectifier and control unit of each type used.

p. One replacement radio control transmitter and three sets of radio control transmitter batteries.

PART 2 PRODUCTS

2.1 POWER SUPPLY

2.1.1 General

Electrical power for the bridge crane is supplied to the existing rigid copper angle conductors from a nominal 480-volt, 3-phase, 60 Hz ungrounded system. The existing main-line conductors and current collectors and all other wire and equipment shall be replaced. The incoming power circuit breaker shall be a 600-volt, 3-pole, manually-operated air circuit breaker having suitable ampere rating. Short circuit protection only shall be provided. The breaker shall be mounted in the protective panel. A circuit breaker shall be provided for each circuit connected to the line side of the incoming ac supply. Each circuit controlling a separate crane motion shall have individual protection. Fused disconnects will be acceptable if ac circuits are grouped on common breakers or if ac circuits are connected to the load side of the ac motor circuit breakers. In the latter case, motor disconnect switches shall be provided so that control circuits may be tested without energizing the motor. Circuit breakers which are not mounted in the control cabinets shall be mounted in the protective panel.

2.1.2 Main-Line Conductor System

The main-line conductor/collector system shall be complete with insulated mounting hardware. Voltage rating shall be 600 volt, minimum.

a. Conductors. The conductors shall be copper, or aluminum with stainless steel contact surface with flexible insulating shrouds that open to expose the live conductor only as the collector shoe passed along. They shall be 3-phase, and rated large enough to service the worst-case loading and limit the voltage drop to 2percent. Minimum ampacity shall be 500A.

b. Collectors. The collectors shall be the sliding shoe type, spring-loaded, with a rating adequate to serve the worst-case loading of the Bridge Crane, but not less than the rating of the feeder breaker. Each phase shall have an assembly with two shoe spaced approximately ten inches apart. Shoes shall be easily replaceable., Collectors shall be complete with mounting assembly for installation on the bridge structure.

2.2 CONNECTIONS TO TROLLEYS

Power and control circuits shall be brought to the trolley by means of a hinged or link carrier system supporting jacket and color coded multiple conductor power and control cables similar and equal to POWERTRAK as manufactured by Gleason Reel, 800 Horicon Street, Mayville, Wisconsin, 53050, phone: 414/387-4120. The conductors of all cables shall be terminated at each end by suitable terminal lugs connected to terminal blocks mounted in junction boxes of Type 4 construction conforming to NEMA Pub. No. ICS 6. Power and control circuits shall be segregated and terminated in separate junction boxes. Two extra conductors shall be provided in each control cable.

2.3 CONTROL SYSTEMS

2.3.1 General

The drive control systems for hoists shall be flux vector control variable-frequency ac. The drive control systems for travel shall be variable frequency ac or flux vector if necessary to meet the accuracy requirements. Hoist and travel motions shall be controlled by master switches. All hoist and travel motions shall be independently operable and capable of simultaneous usage. The controls shall have static reversing of the direction of hoist or travel. The controls shall provide smooth starting, stopping, acceleration, and deceleration at all speeds and loads while operating within safe limits of overload currents. Controls shall be designed to fail safe and cause the brakes to set automatically in case of control malfunction, protective device operation, or loss of power. The controls shall be designed so that, no matter how erratically the master switch handle may be operated, there will be no damage to control or equipment, nor any danger of dropping a hoist load. Controls shall be provided with field-selectable settings to allow driving the motors at greater than rated speeds when loads are light. The hoist and travel speed controls shall be provided with range selector switches which will allow the operator to select full-range control or reduced range control, for full travel of the master switch. Reduced range control shall provide that, when selected, full travel of the master switch shall continuously vary the speed setting from zero to a lower value within the full speed range. The reduced range value shall be field-programmable to between 10 and 30 percent of full speed. Drives and other controls shall be fully functional for testing when the motors are disconnected. All ac control shall be at 120 volts, maximum.

2.3.2 Operating Features

2.3.2.1 Hoisting and Lowering

Positive control of the lowering movement of all hoist hooks shall be maintained under all conditions of load. Mechanical or electrical load breaks shall not be used. The hoist controls shall provide 5 points of speed control for both hoisting and lowering, and shall provide regenerative or dynamic braking in the lowering direction. Means shall be provided to limit the maximum torque a hoist motor can develop, and the controls shall be adjusted so that hook loads greater than 200 percent of the rated hook load cannot be lifted. The load-speed characteristics shall be inherent in the controls at each speed setting. Speed control in the lowering direction shall be such as to permit the operator to stop the hook from any speed point, without time delay by returning the master switch to the OFF position. Control circuits and selector switches shall be provided to allow the two main hoists to be operated from one master switch when desired. The main hoist controls shall be provided with adjustable compensation that allows initial adjustment of the speed between main hoists operating at the same selected speed and load, to be within 1 percent of each other.

2.3.2.2 Hoisting Performances

The following hoisting performances are required:

a. The first (slowest) speed control point for hoisting shall be suitable for spotting all loads from no load on the hook to rated hook load. The hook speed for rated hook load and for no load on the hook shall not exceed 5 percent of the rated hoisting speed.

b. Main Hoist. The last (fastest) speed control point for hoisting shall provide a hoisting speed with rated hook load and with no load on the hook of 100 percent of rated hoisting speed.

Auxiliary Hoist. The fastest speed control setting for hoisting shall provide a hoisting speed with rated hook load of 100 percent of rated hoisting speed. This point shall be field-programmable for a range of 100 to 200 percent rated speed inversely proportional to load, when loads are less than rated. Initial setting of this point shall be 100 percent speed.

c. The last (fastest) speed control point for hoisting shall provide a hoisting speed with an overload on the hook less than rated hoist speed.

d. The intermediate speed control points 2, 3 and 4 shall provide, at any given hook load, hoisting speeds approximately equally spaced between the first and last hoisting speeds.

2.3.2.3 Lowering Performances

The following lowering performances are required:

a. The first (slowest) speed control point for lowering shall be suitable for spotting all loads from no load on the hook to 125 percent of rated hook load. The hook speeds shall not exceed 15 percent of the rated hoisting speed over the entire load range.

b. Main Hoist. The last (fastest) speed control point for lowering shall provide a lowering speed with rated load on the hook shall be less than 110 percent of rated hoisting speed.

Auxiliary Hoist. The fastest speed control for lowering shall provide a lowering speed with rated load on the hook of less than 110 percent of rated hoisting speed. This point shall be field-programmable for a range of 100-200 percent rated speed inversely proportional to load, when loads are less than rated. Initial setting of this point shall be 100 percent speed.

c. The last (fastest) speed control point for lowering shall provide a lowering speed with an overload on the hook which is approximately equal to the rated lowering speed.

d. The intermediate speed control points 2, 3 and 4 shall provide, at any given load, speeds approximately equally spaced between the first and last lowering speeds.

2.3.2.4 Bridge and Trolley Travel

Travel motion controls shall provide essentially constant speed on each respective control point for all hook loads and shall provide dynamic or regenerative braking. Five points of speed control shall be provided for each direction of travel. Control circuits and selector switches shall be provided to allow the two trolley drives to be operated from one master switch when the trolleys are electrically or mechanically linked together. Sufficient speed droop or other acceptable means shall be provided in the travel drives to permit satisfactory operation when two drives are mechanically interlocked. Compensating circuits shall be provided so that the steady-state operating deviation and service

deviation band of speed regulation shall each not exceed 1 percent of the rated speed for all hook loads. The circuit shall be arranged so that the operator may hold the control on any accelerating point. The bridge and trolley travel control shall provide travel speeds as follows:

a. The first travel speed control point shall be capable of spotting all loads from no load on the hook to rated hook load.

b. With no load on the hoist hooks, the travel speeds on the first and last control points shall be not more than 12 percent and 110 percent, respectively, of the rated travel speed.

c. The bridge travel speed with rated load on the hook of the main hoist and the trolley travel speed with rated load on the trolley shall on the first control point be not more than 5 percent of the rated travel speed and on the last control point shall be equal to rated travel speed.

d. The speed on the other points of control shall be evenly spaced between the first and last points as required to give smooth acceleration and deceleration.

2.3.2.5 Positioning Accuracy

The control system shall be so designed that it will be possible to limit the motion of any hoist, trolley travel, or bridge travel motor to not more than the value specified below when starting from complete standstill with any load up to and including rated load.

MOTION	POSITIONING ACCURACY cm (inches)
Main Hoist	0.1587 (0.0625)
Auxiliary Hoist	0.1587 (0.0625)
Bridge Travel	0.1587 (0.0625)
Trolley Travel	0.1587 (0.0625)

2.3.3 Location of Controls and Control Equipment

Master control switches and emergency stop push button shall be located on the operator’s chair in a arrangement as shown as that the operator can actuate the master control switches when sitting in a position that will afford the best view of the respective operation. The direction of movement of the operating handles of all travel master control switches shall simulate the motion controlled. The handles of the hoist master control switches shall move away from the operator for lowering and toward the operator for hoisting. The protective panel and circuit panel boards shall be located in the operator’s cab. The cabinet or cabinets containing the directional magnetic contactors and control equipment shall be mounted on the bridge girder at a location that will permit easy access for the inspection and maintenance of the contactors and wiring. The cabinets shall be mounted so that any meters or indicating displays are no higher than six feet when standing in front of the cabinet.

2.3.4 Variable Frequency Drives

The drive controller for each motion shall provide true four quadrant drive and shall be solid state, pulse width modulated type with adequate capacity to drive its motor or motors at all specified loads and speeds.

It shall be rated for continuous duty with an ambient temperature of 40 degrees C and at the motor current necessary to lift rated load at any speed and a one minute rating of 150 percent current (200 percent rated load). Power factor shall be 0.95 or above from full speed to zero speed and at rated torque. Speed regulation shall be less than 1.0 percent from no-load to full-load, over the entire frequency range. Acceleration and deceleration shall be separately adjustable from 0.1 to 20 seconds. Control shall include torque proving feature, to verify that enough motor torque has built up before the brake is released. Hoist drives shall have closed-loop control with feedback from a motor-shaft-mounted encoder. Minimum protection shall consist of line isolating transformers, line reactors if necessary, transient voltage and current surge suppressors, and either current limiting rectifier type fuses or static instantaneous over-current circuits with sensing in each phase of the incoming line. Motor overload protection shall be included with the controller. The control circuit shall include an adjustable-operating current-limiting circuit capable of limiting maximum current to not more than the current necessary to obtain 200 percent motor torque.

2.3.5 Protective Features

2.3.5.1 General

Undervoltage, reverse-phase, and open-phase protection shall be provided. Overload Protection shall be provided for each motor.

2.3.5.2 Undervoltage Protection

Undervoltage protection shall be accomplished by means of a 3-pole main line magnetic contactor with its operating coil wired into the control circuit so that upon the functioning of any motor overload relay, or the occurrence of a power outage, the power to all motors shall be interrupted and it shall be necessary to return all master switches to the "OFF" position before the main line contactor can be reclosed. A pushbutton control station shall be provided to control the opening and closing of the main line contactor.

2.3.5.3 Reverse-Phase and Open Phase Protection

Reverse-phase and open phase-protection shall be provided by a suitable induction type relay or relays that will open the main line contactor upon the occurrence of a reverse or open-phase condition.

2.3.5.4 Protective Panel

All protective equipment specified above and the main power disconnecting circuit breaker shall be mounted on steel panels and shall be wired to terminal blocks or studs complete and ready for making external connections. The panel shall be enclosed in a cabinet as specified in paragraph 2.3.11. Means shall be provided to permit the operation of the incoming power circuit breaker without opening the cabinet door and to lock it in the open position.

2.3.6 Master Switches

Master control switches for use with the control equipment shall be of a type designed for mounting on an operator's chair. Stepless master switches with indents corresponding to the specified operating characteristics are acceptable. Contacts, if required, shall be rated not less than 15 amperes at 600 volts ac and shall be cam operated,

except as specified below, double break (bridging type) and shall be renewable. The contact operating mechanism shall be of a design that will insure positive operation of the contacts. Master switches mounted with the contact assembly enclosed in dustproof, floor, wall or pedestal mounted enclosures shall be of the open type. The contacts shall be wired to convenient terminal blocks within the enclosure. The enclosures shall have removable covers to permit easy access to the wiring and to the switching mechanism. Master switches mounted with the contact assembly below an open desk shall have NEMA Type 1 contact assembly enclosures which provide ample space for making wiring connections and for inspection and maintenance. The operating mechanism housing shall be cast metal construction. The operating handle shall move in a vertical plane, shall be in a vertical position when the switch is in the "OFF" position, shall be provided with a star wheel and spring loaded pawl that will give a definite "feel" to the operating points and with more force required out of the "OFF" position, and a positive means to return it to the "OFF" position when released by the operator (deadman's handle). Control handles shall be identified as to the motion controlled by the respective master switch by color coding as follows:

Hoist	Vivid Orange
Trolley Travel	Brilliant Yellow
Bridge Travel	Light Blue

Color coding shall be accomplished by either painting the entire handle or by the use of colored plastic knobs.

2.3.7 Limit Switches

Limit Switches for controlling the upper limit of travel of all hoists shall be of the normally closed contact, weighted lever type, actuated directly by the hoist hooks or the hoist blocks and capable of being reset by reversing the movement of the hoist. Limit switches for controlling the lower limit of the main hoist and auxiliary hoist shall be of the traveling nut or rotating cam type, driven through gearing by the hoist. All limit switches shall be provided with nonventilated NEMA Type 12 enclosures and shall be mounted where they will be readily accessible for adjustment and inspection.

2.3.8 Load Cells

A load cell shall be placed on each main hoist to provide alarm circuits and continual load readout. The load cells shall be electronic type with a load indicator. The load indicator with digital display shall be calibrated in tons and to read up to 500 tons and be accurate to within 2 percent of the rated capacity of the load cell.

2.3.9 Push-button Station

The emergency "STOP" push-button for removal of power from the crane motion circuits, and the "START-STOP" pushbuttons for activating the crane motion circuits (main line contractor) shall be of the momentary contact, heavy-duty type. The contacts shall have a pilot and control circuit contact rating of A600 at 600-volts in accordance with NEMA Pub. No. ICS 2. The emergency "STOP" push-button shall be connected to operate the contractor specified in paragraph "Undervoltage Protection" and shall be provided with a red mushroom head.

2.3.10 Resistors

Resistors for motor circuits shall be of the nonbreakable, corrosion-resisting type, shall have a low temperature coefficient, and shall be rated for continuous duty.

2.3.11 Control Cabinets

Control cabinets shall be made of steel sheets, and shall conform to NEMA Pub. No. ICS 6 for NEMA Type 1 construction shall be provided with the necessary conduit entrances and gasketed hinged door or doors as necessary to permit removing any device and the making of all wiring connections. Doors shall be provided with a 3-point latch with means to permit locking the door in the closed position and shall have door swings of not less than 180 degrees. Key locks shall be provided and all locks shall be keyed the same, six keys shall be provided. The doors shall be sized so that they can be totally opened when mounted on the crane.

2.4 REMOTE RADIO CONTROLS

2.4.1 Transmitter

The transmitter shall be interchangeable with the other devices furnished by the manufacturer, except for those features which are uniquely required by these specifications. Each transmitter shall be the manufacturer's current commercial product completely assembled, wired, tested at the factory, and delivered ready for installation and operation. The control transmitter shall be functionally and identical to the cab control with similar operating controls components, layout and "feel", except that it may be deeper and heavier if necessary. A “Cab Control Overdrive” feature shall be provided so that the crane can be operated from the transmitter in case the crane cab operator becomes incapacitated. The transmitter shall have an internal battery power source and internal antenna. It shall be capable of generating and transmitting all control signals necessary for operation of the system. Total weight shall not exceed twelve pounds, including battery.

2.4.1.1 Radio Frequency Characteristics

Radio Frequency (RF) output impedance shall be 50 ohms. The transmitted spurious harmonic emissions shall be less than minus 60 dB. Frequency stability shall be a maximum of 0.0005 percent over the operating temperature range as specified in paragraph "Environmental Requirements". Modulation deviation shall be adjustable to plus or minus 5 kHz. The transmitter shall be designed to maintain a minimum field strength of 30 microvolts within entire operating range. Its operating range shall be up to 300-ft. within the powerhouse structure. The maximum RF power output shall be 1 watt.

2.4.1.2 Frequency Allocation

The transmitters shall operate on a frequency range of 450-470 MHz. Contractor shall assist the Contracting Officer in the preparation of the required frequency allocation application.

2.4.1.3 Transmitter Identity Code

Each transmitter shall transmit a distinct identity code number as part of all signals is emanating from the transmitter. The identity code

shall allow for no less than a seven (7) digit code selection. Transmitter coding telemetry shall be pulsed digital data.

2.4.1.4 Battery Operation

The transmitter unit shall operate from a rechargeable sealed nickel calcium battery which will maintain adequate voltage to provide a minimum of eight hours of continuous operation. Battery replacement shall be accomplished by removal of no more than two screws or latches. The transmitter shall constantly monitor and supervise its own battery powered supply. A low-battery condition shall be indicated when battery voltage falls below 85 percent of the rated voltage.

2.4.1.5 Storage Cabinet, Battery Charger and Spare Batteries

A storage cabinet with provisions for wall mounting and for a minimum ¾-inch conduit connection shall be furnished. The cabinet shall contain a battery charger with provisions for connecting incoming ac power leads via conduit, storage space for the remote control box and for three spare batteries, while at least one additional battery is being charged. The cabinet shall be as specified in paragraph "CABINETS AND ENCLOSURES". The battery charger shall operate on a 120 volt, 60 Hz, single phase, grounded neutral circuit, connected with two No. 12 AWG conductors. A terminal for a No. 12 AWG grounding conductor shall be provided inside the cabinet Four batteries shall be furnished with the transmitter.

2.4.2 Control Panel

The crane mounted equipment shall receive digital frequency modulated (FM) radio coded signals from the control transmitter/encoder, accurately decode them, and operate solid state output devices that are capable of driving their associated crane control components. Each output shall have two screw terminals allowing connections to separate control transformer for each motor panel. A single common return is not acceptable. The output relays shall have current making, carrying and interrupting ratings greater by an acceptable margin, than the requirements of the circuits which they will switch, at voltages equal to or greater than those of the circuits to which they are connected. Output or input devices must be plug in with a hold down screw or latch and color coded by function and operating voltage range. The control panel shall be a programmable microprocessor based controller. The decoding computer shall provide system trouble shooting and diagnostics. It shall analyze and evaluate incoming digital messages and output devices, as well as on-board watchdog timers and discrete hardware.

2.4.2.1 Receiver System

One radio receiving system compatible with the transmitter frequency shall be provided. The system shall be completely assembled, wired, tested at the factory, and delivered ready for installation and operation. Receivers shall be solid-state design and shall use frequency modulation pulsed signal.

a. Receiver Section

Input impedance at the head end of the receiver section shall match a 50 ohm antenna. The receiver shall receive the transmitted signal on a frequency assignment between 450-470 MHz. The sensitivity of the

receiver shall be a minimum of 0.5 microvolts, producing a 20 dB quieting of the receiver output noise. Receiver shall have sparious response rejection not less than a minimum 75 dB. Receiver shall have no more than 5 percent audio distortion measured at 1000 Hz. Receiver shall have a hum and noise level not greater than minus 50 dB below the signal level. Receiver output shall be compatible with the associated device.

b. Receiver Requirements

The receiver shall be selected and installed with adequate gain margin, and adequate gain margin shall be allowed for signal fading and equipment aging. Receiver shall provide for error checking of the transmitted information, to ensure all information is received as intended. An error rate of less than 5 errors per 1,000,000 commands shall be maintained. Error rate shall be determined end to end from transmitter through receiver to decoder output.

2.4.2.2 Control Panel Supervision

The supervisory system shall provide constant supervision of the operating conditions of the control panel. Indicators shall be provided for each major component, and an audible signal shall be produced in the event of failure of any major component. Panel shall provide for fail safe condition and all crane functions shall cease when a failure occurs.

2.4.2.3 Electrical Connections

The control panel shall be designed with modular components to allow interchange of components for maintenance purposes.

2.4.2.4 Power Supply

The solid state power supply shall provide regulation for ± 10 percent of the input voltage. The power supply shall be completely transistorized and shall contain no moving parts. Output voltage and current regulation and protection are an integral part of the power supply design. Either overvoltage or undervoltage in excess of specifications shall disconnect the radio decoder for its protection. When power is returned to a safe level, operation shall resume. Power supply shall provide transient protection on a line to line or line to ground basis. The power supply shall include ground isolation between input and output terminals to allow grounding of all radio crane control equipment and thereby eliminate shock hazards to maintenance personnel and others.

2.4.2.5 Anti-Condensation Heaters

Control cabinets shall be equipped with thermostatically controlled anti-condensation heaters.

2.4.3 Antenna System

The antenna system shall utilize vertical polarization antennas and matching networks as needed for the proper coverage. The antenna system shall be omni-directional. The antenna system and cabling shall be furnished to provide adequate system gain. The receiver antenna

location shall be selected by the Contractor and approved by the Contracting Officer to meet the requirements as determined from the topography within the powerhouse.

2.5 WARNING SIGNALS

2.5.1 Travel Warning

A 25 cm (10-inch), single stroke, electrically operated bell shall be installed at a suitable location on the exterior of the cab. The bell shall have an ANSI rating of not less than 65 decibels at 3 meters (10 feet), and shall operate on 60-Hz, 115 volts. A timer shall be provided to give stroking impulses to the bell at approximately five-second intervals and shall be connected into the bridge travel master switch so that movement of the switch from the "OFF" position in either direction initiates the signal. A foot operated switch shall also be provided and located in the operator's cab for operation of the bell when the crane is at standstill for as long as the switch is actuated.

2.5.2 Crane Operation

A flashing amber light shall be installed under each operator’s cab. The lights shall operate automatically whenever the crane is energized.

2.6 MOTORS

The size (HP) and speed (RPM) of the new motors shall be the same as the existing motors.

Motors except as otherwise specified herein shall conform to the provisions of NEMA Pub. No. MG 1. They shall be rated at 230/460 or 460-volt, 3-phase, 60-Hz, ac power and shall be of the squirrel cage induction type and shall be of the totally enclosed frame construction and may be either fan-cooled or non-ventilated. Winding insulation shall be either Class B, F or H and the temperature rise of the motors furnished shall not exceed that permitted by the applicable NEMA Standards for the class of insulation used. Each motor shall have a horsepower rating sufficient to meet the respective operating requirements specified without exceeding its rated full-load torque. The time ratings shall be not less than the following:

Main hoist motors	Continuous
Aux. hoist motors	Continuous
Trolley travel motors	60 min.
Bridge travel motors	Continuous

Bearings shall be of the anti-friction type and the design of the motor housing and method of assembly shall permit ready removal of the end brackets and prevent escape of lubricant and entrance of foreign materials. Unless the bearings are of an approved prelubricated type requiring no addition or change of lubricant for a period of at least 5 years, readily accessible fitted openings located in the top and bottom of the bearing housing, respectively, shall be provided for applying and draining the lubricant. Pressure lubricating fittings may be used provided the housings are properly vented to prevent damage to the seals. In addition, the motors for the trolley drives shall have a C-face for mounting a disc brake.

2.7 BRAKES

2.7.1 General

Each hoist motor shall be provided with two electric brakes, one mounted on the motor shaft and one on the reducer shaft. One electric brake, mounted on the motor shaft, shall be provided with each travel motor.

2.7.2 Type

The electric holding brakes shall be of the shoe type, spring set, with direct current magnet release, and shall be arranged for Type I mounting as defined in ICS 2-220.60 of NEMA Pub. No. ICS, if practicable. Trolley brakes shall be disc type.

2.7.3 Rating

Hoist brakes shall have a torque rating not less than 125 percent of the rated torque of the motor. Bridge and trolley travel brakes shall have a torque rating not less than full-load torque of the bridge and trolley motors. The torque rating of the brake shall be referred to the shaft on which the brake wheel is mounted, the efficiency of the speed reducer not being considered. The torque ratings shall be based on the following conditions:

Hoist and bridge travel brakes:	Continuous duty
Trolley travel:	1-hour duty

2.7.4 Release

Releasing magnets shall be of the direct current shunt type. Direct current shall be supplied by means of a rectifier and control unit of proper rating and suitable for operation on power supplied the crane. The complete unit (brake and rectifier) shall be suitable for connection to the control circuit or the ac power circuit of the motor with which the brake is used so that the brake will set or release when the motor is de-energized, or energized, respectively. A hand release which is self-resetting shall be provided. The hoist brakes shall be connected into the control system such that one brake will set after a small time delay. The time delay shall be adjustable and the method of accomplishment shall be subject to approval. The rating of the brake releasing magnet shall be sufficient to release and hold the brake in the released position with 80 percent of rated voltage impressed on the incoming terminals.

2.7.5 Adjustment

Suitable means shall be provided to allow varying the holding torque and adjusting the positions of the shoes to compensate for wear, unless the design is such that compensation for shoe wear is automatic. The hoist motor brakes which are rated at 125 percent of the rated motor torque shall be initially adjusted to give a holding torque equivalent to 100 percent of the full-load motor torque.

2.7.6 Mechanical Construction

Except for brake base, brake wheels, shoes, shoe holders and electrical parts, no cast iron, unless of a type having acceptable structural properties as approved by the Contracting Officer, shall be used in brake construction. All allowed cast iron components except electrical

parts shall be ductile iron. All pins, fittings and other miscellaneous small metal parts shall be of corrosion-resisting metal or shall be treated to render corrosion resistant by galvanizing; sherardizing; or plating with zinc, cadmium or copper. Bearings shall be fitted with bronze or other approved bushings to prevent any binding of moving parts. (Antifriction bearings of corrosion-resisting construction may be used.) Adequate means shall be provided for lubricating oil bearings, unless the bearings are of an approved self or prelubricated type.

2.7.7 Designation and Markings

Nameplates shall be provided for each brake and attached to a part of the brake which ordinarily will not be renewed during its service life. Each nameplate shall conform to standard practice and clearly indicate the manufacturer's name, identification symbols, serial number, and salient design features such as type, frame, torque rating and voltage.

2.8 PANELBOARD AND CIRCUITS

2.8.1 Panelboard

One 480-volt and one 120-volt dead front panelboard complete with buses, gutters, barriers, wiring and the following circuit breakers, as a minimum, shall be furnished and mounted in the operator's cab. Means shall be provided for locking each circuit breaker in the open position. The panelboards shall be in accordance with NEMA Pub. No. PB-1.

1 - 3-Pole breaker for control of crane movement circuits

1 – single breaker for the working area lights

1 - 3-Pole breaker for the 480 volt outlet

1 - Single-pole, 20-ampere breaker for the crane control circuits

1 - Single-pole, 20-ampere breaker for control of operator's cab lights

2 - Single-pole, 20-ampere breakers for control of the convenience outlets

2 - Single-pole, 20-ampere spare breakers

2.8.2 Air Circuit Breakers

The air circuit breakers shall conform to the applicable requirements of UL 489 and shall be heavy duty type, I-T-E Type ET or Westinghouse Type AB De-ion circuit breakers or equal. Commercial air circuit breakers of the Westinghouse Quick-Lag Type, I-T-E Type EQ or Square D Type Q will not be acceptable. The air circuit breakers for 120 or 240 volts ac circuits shall be rated not less than 120/240 or 240 volts ac, and shall have a minimum NEMA interrupting capacity of 10,000 symmetrical amperes. The air circuit breakers for the 480-volt ac circuits shall be rated 600 volts ac, and shall have a minimum NEMA interrupting capacity of 18,000 symmetrical amperes at 600 volts ac.

2.8.3 Not Used

2.8.4 Cab Lights

Fixtures for 100 watt fluorescent fixtures with lamps, ballasts and shockproof type lamp sockets, equal to Holophane Cat. No. 7200-4, shall be provided in the operator's cab. The ballasts shall meet UL standards for Class P ballasts and operate within specifications over a temperature range of 0° to 100° C (32° to 212° F).

2.8.5 Convenience Outlets

Two convenience outlets shall be provided along each walkway on the main bridge girders, and two convenience outlets shall be provided in the operator's cab. All convenience outlets shall be connected to the 120-volt receptacle circuits in the panelboard and shall be GFCI type, duplex 125-volt, 20-ampere, 2-pole, 3-wire, polarized, NEMA configuration 5-20R, equal to Hubbell No. GF8300 (Hospital Grade), provided with cast metal receptacle housing with weatherproof caps and mounted on cast metal boxes. The receptacle housing and box shall be equal to Crouse-Hinds FS or FD boxes and provided with Hubbell 5206 type covers or equal.

2.8.6 Power Outlets

One 30 ampere, 480-volt, 3-phase, power outlet and box equal to Crouse-Hinds ARRH3482 shall be provided and installed on the crane walkway midway between the limits of trolley travel.

2.9 CONDUIT

Rigid steel conduit shall conform to NEMA C80.1 and shall be zinc-coated both inside and outside by hot-dip galvanizing method. Flexible conduit shall conform to UL 360, shall have a hot-dip galvanized steel core, copper ground wire and a waterproof extruded PVC cover.

2.10 INSULATED WIRE AND CABLE

2.10.1 General

Materials, construction and tests, unless otherwise specified, shall conform to the applicable requirements of NEMA Pub. No. WC 57 or WC 70, as applicable. Parts, tables, sections, appendices, grades and classes specified will refer to the above NEMA Standard, unless otherwise stated. Unless otherwise specified or approved, all wire and cable for power, control and lighting shall be single conductor. Wire for power and motor circuits shall have a current carrying capacity of not less than the full-load current of the motor or the circuit but in no case less than No. 10 AWG. Wire for control circuits shall not be smaller than No. 14 AWG. Wire for lighting circuits shall have a current carrying capacity corresponding to the ampere rating of the circuit's air-circuit breaker, but in no case less than No. 12 AWG. Wires exposed to heat or in resistor cabinets shall be sized as required but in no case less than No. 10 AWG.

2.10.2 Conductors

Conductors shall conform to all the applicable requirements of Part 2 of WC 57, or see Section 2 of WC 70 and shall be annealed copper wire. Copper conductors shall be tin or lead alloy coated, or bare, as required by the type of insulation used.

Conductors shall be solid or stranded as required below:

a. Power and Control Circuits. Conductors shall have Class B or C stranding.

b. Lighting Circuits. Conductors of No. 10 AWG and smaller shall be solid, and conductors of No. 8 AWG and larger shall have Class B stranding.

2.10.3 Insulation

Insulation shall be a cross-linked polyethylene meeting the dimensional, electrical, and physical requirements of Part 3 of NEMA WC 57 or Section 3 of WC 70. Type I or Type II grade of EPR insulation shall be used for single-conductor cables with a jacket and for the individual conductors of a multiple-conductor cable with an overall jacket. Insulation thickness shall be as required by Table 3-1, Part 3 of NEMA WC 57 or Table 3-1 of WC 70 as applicable, for rated circuit voltage of 0-600 volts. Single conductor cross-linked polyethylene insulated cable with Column A thickness only will be permitted without a jacket. Single-conductor cables shall have jackets when insulation thicknesses are in accordance with Column B, Table 3-1, Part 3 of NEMA WC 70.

2.10.4 Jackets

An outer jacket of a synthetic thermosetting material shall be applied over multiple-conductor cables. Single-conductor cables and individual conductors of a multiple-conductor cable may have a jacket. The jacket shall be tightly and concentrically formed around the core of the cable. Single-conductor cables shall have jackets when insulation thicknesses are in accordance with Section H of NEMA WC 70.

The jacket shall be one of the materials listed below in accordance with the applicable paragraphs of NEMA WC 70. Polyvinyl chloride compounds will not be permitted. Variations from the materials required below will be permitted only if approved for each specific use, upon submittal of sufficient date to prove that they exceed all specified requirements for the particular application.

a. Neoprene, heavy-duty black.

b. Chlorosulfonated polyethylene, heavy-duty.

c. Chlorinate polyethylene, cross-linked, heavy-duty.

The outside diameter of single-conductor wires and multiple conductor cables shall not vary more than 5 percent and 10 percent, respectively from the manufacturer's published catalog data.

2.10.5 Wire Near Resistors

Wire exposed to heat shall be Type SF-2.

2.10.6 Control Panel Wiring

Control panel wiring shall be stranded copper switchboard wire with 600-volt insulation type SIS. Hinge wire shall have Class K stranding. Hinge wire shall be used between stationary and hinged equipment and shall be formed in wire loops or bundles at least 750 cm (two feet) long which shall provide rotation around the longitudinal axis of the conductors.

2.10.7 Linked Carrier System

The connections to the trolley shall be made using Type G cables with 75° C (167° F), 600 volt insulation and heavy-duty "Neoprene" jacket for the power circuits and type SO cord with 60° C (140° F), 600-volt insulation and "Neoprene" jacket for control and lighting circuits. Type G cables and SO cords shall conform to the applicable requirements of NEMA Pub. No. WC 3, Part 7, paragraphs 7.6 and 7.7, respectively. Conductors shall have not less than Class H stranding.

2.11 TERMINAL BLOCKS

Terminal blocks, where required, shall be molded type with barriers, rated not less than 600 volts, similar to General Electric Company Type EB-25 or Marathon Electric Manufacturing Corp. Series 1600, or approved equal. The terminal shall be removable binding, fillister, or washer head screw terminal, or stud type with contact and locknuts, and not less than size No. 10, having length and space for connecting at least two indented terminals on No. 19/22 AWG conductors to one terminal. White or other light-colored plastic marking strips, fastened by screws to the molded sections at each block, shall be provided for circuit designation. Each connected terminal of each block shall have the circuit designation or wire number neatly printed on the marking strip with durable marking fluid. One reversible or one spare marking strip shall be furnished with each block.

PART 3 EXECUTION

3.1 EQUIPMENT REMOVAL

Remove all electrical control equipment, motors, brakes, conduit (unless reused), wire and cable, conductor system (including mounting brackets),and the four high bay incandescent light fixtures. All equipment removed shall become the property of the contractor.

3.2 EQUIPMENT INSTALLATION

3.2.1 General

All work shall be installed as shown and in accordance with the manufacturer’s recommendations, unless otherwise specified. All necessary interconnections, services, and adjustments required for a complete and operational system shall be provided. Electrical work shall be in accordance with NFPA 70.

3.2.2 Manufacturers Technical Services

Equipment manufacturers shall make available the services of a competent installation technician during installation, startup, an testing. He shall have the responsibility of checking the installation and making any field adjustments necessary to obtain a working system within the applicable requirements. The manufacture’s representative shall also be responsible for supervision of all testing, and for providing system training.

3.2.3 Conduit

All wiring between equipment units or components shall be installed in rigid, hot-dip galvanized steel conduit, except that liquid-tight flexible conduit may be used for short connection when so approved by the Contracting Officer. The conduit shall be securely mounted and installed in a neat and workmanlike manner. Conduit shall not be run on top of girders or walkways and, except where necessary, shall not be exposed to view from the powerhouse floor. Conduit junction boxes, cover plates, and fittings shall be galvanized cast or malleable iron, cast aluminum, or cast brass. Turns shall be made by means of conduit fittings, in order that the conduit may fit close to the crane framework, and all joints shall be threaded and all termination's at equipment units or components shall be made by lock nuts and bushings or shall be threaded. Conduit unions shall be used to join conduit where standard couplings cannot be used. No running threads will be permitted. Ends of conduit shall be carefully reamed. Separate conduit systems shall be provided for power, control and lighting circuits. The entire conduit system shall be grounded. No conduit smaller than 2 cm (3/4 inch) size shall be used. All mechanical work of installing the conduit shall be complete before installing wire.

3.2.4 Wiring

All conductor connections, except for splices in lighting conductors which are made in junction boxes, shall be terminated at terminal studs or terminal blocks using approved indented terminal connectors of the ring-tongue type which are equal to "STA-KON" type as manufactured by Thomas and Betts Co. All screw type terminals shall have lock washers and all stud type terminals shall have contact nuts and either locking nuts or lock washers. No splices shall be made in any wiring on a panel or in a conduit. Single conductors and individual conductors of cables shall be identified with non-metallic tube-type markers at each termination. Tubing shall be sized to fit the wire and shall be uniform in position. The tubing shall be stamped with black wire numbers as indicated on the drawings. Multiple-conductor cables shall be identified with cable designation by embossed aluminum band markers at each termination.

3.3 ELECTRICAL TESTS

3.3.1 General

Each item shall be tested, as required below, to determine if the item is free from electrical and mechanical defects and conforms to the requirements of the specifications. All tests required herein shall be witnessed by the GQAR, unless waived in writing, and no equipment shall be shipped until it has been approved for shipment by the GQAR. The Contractor shall notify the GQAR sufficiently in advance of the date of the tests, so that arrangements can be made for the GQAR to be present at the tests. The test equipment and the test methods used shall conform to the applicable requirements of ANSI, IEEE and NEMA standards, and shall be subject to the approval of the GQAR. The Contractor shall furnish five certified copies of the reports of all tests recording all data obtained during any given test. Certified copies of the results of the performance and speed-torque tests for duplicate motors will be accepted in lieu of requiring these tests to be repeated. The cost of performing all tests shall be borne by the Contractor and shall be included in the price bid.

3.3.2 Electric Brakes

Each electric brake shall be given the following tests:

a. Operation of release with 80 percent of rated voltage applied to the incoming terminals of the rectifier.

b. Resistance measurement of DC operation coil.

c. Dielectric.

3.3.3 Control System Equipment

Each of these items shall be tested in accordance with NEMA ICS 1.

3.3.3.1 Controller

Controllers shall be given the following tests:

a. Adjustment, fit and material.
b. Successful or general operation.
c. Resistance's.
d. Dielectric.
e. Insulation resistance.

3.3.3.2 Limit Switches

Limit switches shall be given the following tests:

a. Adjustment, fit and material.
b. Accuracy of trip and reset.
c. Successful or general operation.
d. Dielectric.
e. Insulation resistance.

3.3.4 Motors

Each induction motor shall be given the standard routine and performance tests as specified in NEMA MG-1. Performance curves indicating the results of these tests shall be furnished as follows:

a. Performance Test. Torque or percent of rated horsepower output as abscissa vs. efficiency, power factor, amperes, watts and rpm or percent slip as ordinates.

b. Speed-Torque Test. Torque as abscissa vs. speed in rpm or percent of synchronous speed as ordinates.

3.3.5 Wiring

After installation, but just prior to terminal connection, each conductor shall be tested as follows:

a. A 1000-volt "Megger" test shall be performed with all other conductors in each conduit grounded. The final insulation resistance of each conductor shall not be less than one megohm.

b. A continuity test of each conductor from terminal to terminal shall be performed and a phase identification check of power conductors shall be made.

c. Test data shall include "Megger" readings, results of the continuity test, and conductor identification markings.

d. Any length of wire and cable failing under the above tests shall be replaced.

3.4 FREQUENCY ALLOCATION

AFARS 252.235-7003 FREQUENCY AUTHORIZATION. (DEC 1991) - Alternate I (DEC 1991)

a. The Contractor shall prepare applications and otherwise perform all work necessary for the Government to obtain AUTHORIZATION for radio frequencies required in support of this contract.

b. For any experimental, developmental, or operational equipment for which the appropriate FREQUENCY allocation has not been made, the Contractor shall provide the technical operation characteristics of the proposed electromagnetic radiating device to the Contracting Officer during the initial planning, experimental, or developmental phase of contract performance.

C. The Contractor shall use DD Form 1494, Application for FREQUENCY AUTHORIZATION, to obtain radio FREOUENCY AUTHORIZATION.

d. The Contractor shall include this clause, including this paragraph d., in all subcontracts requiring the development, production, construction, testing, or operation of a device for which a radio FREQUENCY AUTHORIZATION is required.

(End of clause)

END OF SECTION 16050CH