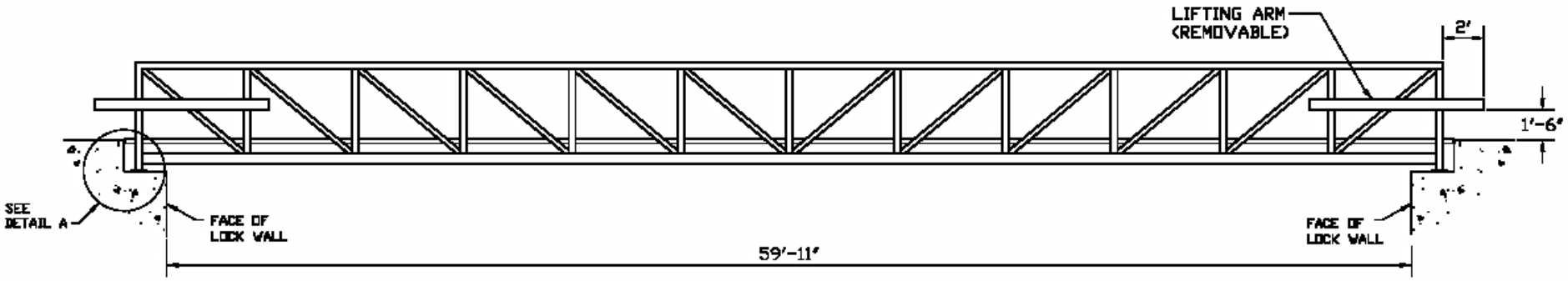


ELEVATION VIEW

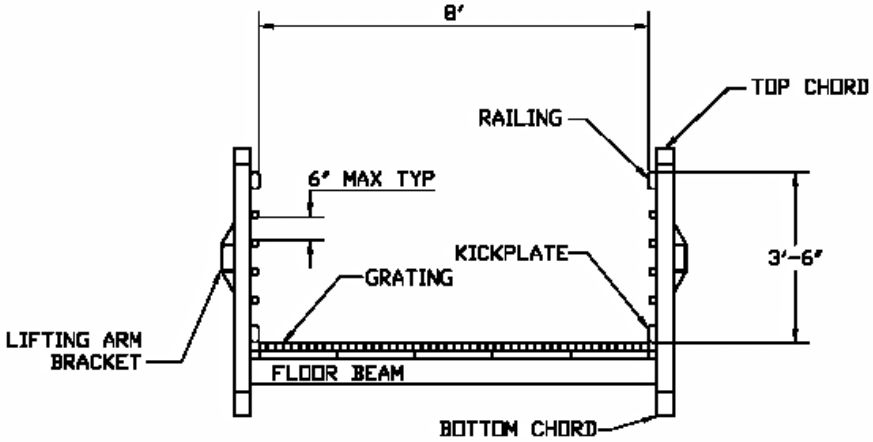


SECTION VIEW

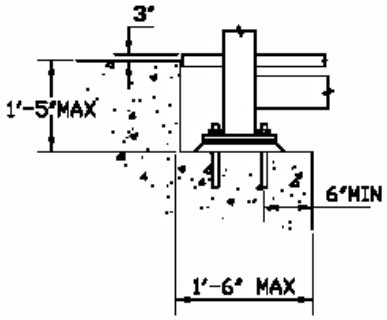


DETAIL A

ATTACHMENT A